Hanwha Vision

Network Купольные

XND-8083RV

6MP AI IR Dome Camera

Key Features

- 6MP resolution
- 4.4~9.3mm (2.1x) motorized varifocal
- Color: 0.04 Lux (F1.3, 1/30sec, 30IRE), 0 Lux (IR LED on)
- Maximum 30fps (H.265/H.264)
- WiseIR: IR viewable length 50m (164.04ft)
- Day & Night (ICR), extremeWDR (120dB)
- Hard-coated dome bubble
- WiseNR II (Based on AI engine), WiseStreamIII (Based on AI engine)
- Analytics events based on AI engine (NPU) : Object detection (Person/Face/Vehicle - car, truck, bus, bicycle, motorcycle/License plate),
IVA (Virtual line/Area, Enter/Exit, Loitering, Direction, Intrusion)
- Analytics events : Defocus detection, Motion detection, Tampering, Fog detection
Audio detection, Sound classification, Shock detection, Appear/Disappear
- IP52, IK10

Design and specifications are subject to change without notice. The latest product information / specification can be found at HanwhaVision.com
Hanwha Vision is formerly known as Hanwha Techwin.

© Hanwha Vision CO., LTD. All rights reserved.

XND-8083RV

6MP AI IR Dome Camera

Specifications

Video

Imaging Device	Size	1/1.8"
	Type	CMOS
Resolution		3328x1872, 3072x1728, 2688x1520, 2592x1944, 1920x1080, 1600x1200, 1280x1024, 1280x960, 1280x720, 1024x768, 800x600, 800x448, 720x576, 720x480, 640x480, 640x360, 320x240
Max. Framerate	H.265/H.264	30fps/25fps(60Hz/50Hz)
	MJPEG	30fps(@6MP Max. 5fps)
Min. Illumination (Lux)	Color(1/30sec, 30IRE)	0.04
	BW(1/30sec, 30IRE)	0.004
Video Out		CVBS: 1.0 Vp-p / 75Ω composite for installation, USB: Micro USB Type B. Preview and installation ONLY. Requires WiFi dongle.

Lens

Focal Length (mm)		4.4~9.3
Zoom Ratio	Optical	2.1x
Max Aperture Ratio (F number)	Wide	1.3
	Tele	2.15
Angular Field of View	Horizontal	113°~47°
	Vertical	58°~26°
	Diagonal	138°~54°
Min. Object Distance		0.5m(1.64ft)
Focus Control		Simple focus, Manual
Lens Type		P iris(IR corrected)

Pan / Tilt / Rotate

Pan / Tilt / Rotate Range	Pan	0°~360°
	Tilt	0°~85°
	Rotate	0°~355°

Operational

Day & Night	Auto(ICR)

Design and specifications are subject to change without notice. The latest product information / specification can be found at HanwhaVision.com
Hanwha Vision is formerly known as Hanwha Techwin.

© Hanwha Vision CO., LTD. All rights reserved.

Operational

Backlight Compensation		BLC, HLC, WDR, SSDR
Wide Dynamic Range (dB)		120
Digital Noise Reduction		WiseNR II (Based on AI engine), SSNR V
Digital Image Stabilization		Support(built-in gyro sensor)
Defog		Support
Motion Detection	Quantity	8ea
	Shape	8point Polygonal zones
Privacy Masking	Quantity	32ea
	Shape	4point Quadrangle zones
	Color / Option	Gray, Green, Red, Blue, Black, White, Mosaic
Gain Control		Off, Max gain, Manual
White Balance		ATW, NarrowATW, AWC, Manual, Indoor, Outdoor
LDC		Support(Fill/stretch mode)
Electronic Shutter	Mode	Minimum, Maximum, Anti flicker, Prefer shutter control(Based on AI engine)
	Speed Range	2~1/12,000sec
Video Rotation		Flip, Mirror, Hallway view(90°/270°)
Alarm Interface	In/Out	2 configurable I/O ports
	Others	12VDC output
Alarm Triggers		Analytics, Network disconnect, Alarm input, App event, Time schedule, MQTT subscription
Alarm Events When Alarm Trigger Occurred		File upload(image): e-mail/FTP/SFTP, File upload(video clip): FTP/SFTP, Notification: e-mail, Recording: SD/SDHC/SDXC or NAS recording at event triggers,Alarm output, Handover: PTZ preset,send message by HTTP/HTTPS/TCP,Audio clip playback, MQTT: publication
Audio In		Selectable(mic in/line in), Built-in mic
Audio Out		Line out
Light Type		IR LED
Light Viewable Length	IR	WiseIR 50m(164.04ft)
IR Wavelength		850nm

Analytics

Classified Object Type		Person, Face, Vehicle, License plate
Attributes	Vehicle	Type(car, bus, truck, motorcycle, bicycle)
Thumbnail		DetectionShot
Analytics Events	Based on AI Engine	Object detection, Virtual line(Crossing/Direction), Virtual area(Loitering/Intrusion/Enter/Exit), Motion detection
	Normal	Defocus detection, Tampering, Fog detection, Audio detection, Sound classification, Shock detection, Virtual area(Appear/Disappear)

Design and specifications are subject to change without notice. The latest product information / specification can be found at HanwhaVision.com
Hanwha Vision is formerly known as Hanwha Techwin.

© Hanwha Vision CO., LTD. All rights reserved.

Analytics

Business Intelligence	Based on AI Engine	People counting, Queue management, Heatmap, Vehicle counting

Network

Ethernet		Metal shielded RJ-45(10/100/1000BASE-T)
Video Compression		H.265/H.264: Main/Baseline/High, MJPEG
Audio Compression		G.711 u-law /G.726 selectable,G.726(ADPCM) 8kHz,G.711 8kHz, G.726: 16kbps,24kbps,32kbps,40kbps, AAC-LC: 48kbps at 16kHz
Smart Codec		Manual, WiseStreamIII
Bitrate Control		H.265/H.264: CBR or VBR, MJPEG: VBR
Streaming	Unicast	Up to 20 users
	Multicast	Support
	Multiple Streaming	Up to 10 profiles
Protocol		IPv4, IPv6, TCP/IP, UDP/IP, RTP(UDP), RTP(TCP), RTCP, RTSP, NTP, HTTP, HTTPS, SSL/TLS, DHCP, FTP, SFTP, SMTP, ICMP, IGMPv2, SNMPv1/v2c/v3(MIB-2), ARP, DNS, DDNS, QoS, UPnP, Bonjour, LLDP, CDP, SRTP(TCP, UDP Unicast), MQTT
Application Programming Interface	ONVIF	S, G, T, M
	Others	SUNAPI(HTTP API), Hanwha Vision Open Platform
Direct Cloud Connection		Support

Security

OS / Firmware Protect	Encrypted firmware, Secure boot, Signed firmware
User authentication	Digest authentication, Prevent brute-force attack
Network authentication	IEEE 802.1X(EAP-TLS, EAP-LEAP, EAP-PEAP, MSCHAPv2)
Secure Communication	HTTPS, WSS(WebSocket Secure), SRTP
Access Control	IP-based access control
Data Protect	Encryption credentials, Encrypt compress for live recording file export
Audit	Access / System / Event Log management
Device ID	Device certificate(Hanwha Vision Root CA)
Secure Storage	TPM(Trusted platform module), HTPM(Hanwha Trusted Platform Module), SDcard partition encrypt(AES-256)
Security Certificate	TPM 2.0 with FIPS 140-2 level2

General

Memory	RAM	4GB
	Flash	512MB
Edge Storage	Micro SD/SDHC/SDXC	Max. 512GB x 2slot(Total 1TB)
Edge Storage(OnCloud)	Micro SD/SDHC/SDXC	Max. 1TB x 2slots (Total 2TB) *Hanwha Vision branded microSD cards have been certified and recommended for OnCloud edge recording.

Design and specifications are subject to change without notice. The latest product information / specification can be found at HanwhaVision.com
Hanwha Vision is formerly known as Hanwha Techwin.

© Hanwha Vision CO., LTD. All rights reserved.

Environmental & Electrical

Operating Condition	Temperature	-25°C~+50°C(-13°F~+122°F)
	Humidity	0~100% RH(condensing)
	Others	Humidity control with AIR vent
Storage Condition	Temperature	-50°C~+60°C(-58°F~+140°F)
	Humidity	0~90% RH(non-condensing)
Input Voltage		PoE+(IEEE802.3at, Class4), 12VDC
Power Consumption	PoE	Max. 22.5W, typical 17.9W
	12VDC	Max. 20W, typical 15.6W
Power Redundance Failover		Support

Mechanical

Color	White
Material	Aluminum
RAL Code	RAL9003
Product Dimensions	ø160x125mm(6.30x4.92")
Product Weight	1,600g(3.53lb)
Compatible Conduit Hole	12.7mm(1/2")(M20)
Compatible Gang Box	Single, Double, 4" Octagon, Square

Certifications & Standards

EMC	FCC 47 CFR 15 Subpart B Class A, ICES-3(A)/NMB-3(A), CE/UKCA - EN55032 Class A, EN 50130-4, EN 61000-3-2, EN 61000-3-3, VCCI CISPR 32 Class A, RCM AS-NZS CISPR 32 Class A, KS C 9832 Class A, KS C 9835
Safety	UL 62368-1, CAN/CSA C22.2 NO. 62368-1, IEC 62471
Environment	IEC/EN 63000, IEC 60529 IP52, IEC 62262 IK10

DORI (EN62676-4 standard)

Detect (25PPM/ 8PPF)	Wide	44.1m(144.54ft)
	Tele	153.1m(502.22ft)
Observe (63PPM/ 19PPF)	Wide	17.6m(57.82ft)
	Tele	61.2m(200.89ft)
Recognize (125PPM/ 38PPF)	Wide	8.8m(28.91ft)
	Tele	30.6m(100.44ft)
Identify (250PPM/ 76PPF)	Wide	4.4m(14.45ft)
	Tele	15.3m(50.22ft)

Design and specifications are subject to change without notice. The latest product information / specification can be found at HanwhaVision.com
Hanwha Vision is formerly known as Hanwha Techwin.

© Hanwha Vision CO., LTD. All rights reserved.

XND-8083RV

6MP AI IR Dome Camera

CAD

Unit: mm [inch]

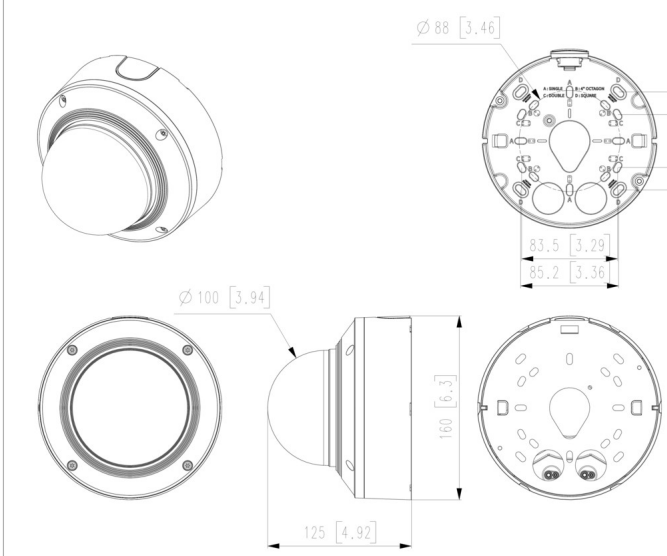

No.	MODEL NAME	DATE
16		
15	XND-9083RV	21.05.25
14	XND-8093RV	21.05.25
13	XND-8083RV	21.05.25
12	XND-6083RV	21.05.25
11	PND-A6081RV	21.02.08
10	XND-9082RV	19.12.18
9	XND-8082RV	19.12.18
8	XND-8081REV	19.12.18
7	XND-6081REV	19.12.18
6	PND-A9081R	19.09.27
5	XND-8081RV	19.09.27
4	XND-6081RV	19.09.27
3	XND-6081V	19.09.27
2	XND-8081VZ	19.09.27
1	XND-6081VZ	19.09.27

Unit:mm[inch] | SCALE:1/1 | Hanwha Techwin

© Hanwha Techwin Co.,Ltd. All rights reserved.

© Hanwha Vision CO., LTD. All rights reserved.

Compatible Devices

SBP-167HMW

SBP-160HMW1

SBV-180BW

SBV-180WW

SBP-150CMI

SBP-300CMI

SBP-300CMW1

SBP-900CMW

SBP-300CMTW

SBP-300CMTS

SBP-300WMW

SBP-300WMW1

SBP-390WMW2

SBP-160WMW1

SBD-180PMW

SBP-300PMW2

SHD-1350FPW

SBP-300LMW

SBP-156LMW1

SBP-300KMW1

SBP-300NBW

SPB-IND85W

Design and specifications are subject to change without notice. The latest product information / specification can be found at HanwhaVision.com
Hanwha Vision is formerly known as Hanwha Techwin.

© Hanwha Vision CO., LTD. All rights reserved.