Network Dome

XND-A6084RV

2MP AI IRドームカメラ

Key Features

- 2MP Image Resolution
- 2.8~12mm Focal Length
- 50m IR Length
- IP52, IK10 Rated
- 2.8〜12mm焦点距離
- IP52、IK10規格
- AIベースの画像強化用デュアルNPU
- AIベースの分析とビジネスインテリジェンス

Design and specifications are subject to change without notice. The latest product information / specification can be found at HanwhaVision.com
Hanwha Vision is formerly known as Hanwha Techwin.

© Hanwha Vision CO., LTD. All rights reserved.

XND-A6084RV

2MP AI IRドームカメラ

Specifications

映像

Imaging Device	サイズ	1/2.8"
	タイプ	CMOS
解像度		1920x1080, 1280x960, 1280x720, 1024x768, 800x600, 640x480, 640x360, 320x240, 320x180
Max. Framerate	H.265/H.264	60fps/50fps(60Hz/50Hz)
	MJPEG	30fps
Min. Illumination (Lux)	Color(1/30sec, 30IRE)	0.02
	BW(1/30sec, 30IRE)	0.002
Video Out		USB: USB Type C. Preview and installation ONLY. Requires WiFi dongle.

レンズ

Focal Length (mm)		2.8~12
Zoom Ratio	Optical	4.3x
Max Aperture Ratio (F number)	Wide	1.4
	Tele	3.6
視野角度	Horizontal	120°~27°
	Vertical	63°~15°
	Diagonal	143°~32°
Min. Object Distance		0.5m(1.64ft)
Focus Control		シンプルフォーカス, 手動
Lens Type		P iris(IR corrected)

Pan / Tilt / Rotate

Pan / Tilt / Rotate Range	Pan	0°~360°
	Tilt	0°~75°
	回転	0°~355°

技能

Day & Night	Auto(ICR)
Backlight Compensation	BLC, HLC , WDR, SSDR

Design and specifications are subject to change without notice. The latest product information / specification can be found at HanwhaVision.com
Hanwha Vision is formerly known as Hanwha Techwin.

© Hanwha Vision CO., LTD. All rights reserved.

技能

Wide Dynamic Range (dB)		150
Digital Noise Reduction		WiseNR II (Based on AI engine), SSNR V
Digital Image Stabilization		サポート
曇り除去		サポート
モーション検知	Quantity	8ea
	Shape	8point Polygonal zones
Privacy Masking	Quantity	32ea
	Shape	8point Polygonal zones
	Color / Option	灰色, 緑, Red, 青, 黒, 白, モザイク, 紫色, 黄色
	Dynamic Privacy Masking: Color / Option	灰色, 緑, Red, 青, 黒, 白, モザイク, 紫色, 黄色
ゲイン制御		オフ, 最大ゲイン, 手動
ホワイトバランス		ATW, NarrowATW, AWC, 手動, 室内, 屋外
LDC		Support(Fill/stretch mode)
Electronic Shutter	モード	最小, 最大, アンチフリッカー, Prefer shutter control(Based on AI engine)
	Speed Range	2~1/40,000sec
ビデオ回転		FLIPモード, ミラー, Hallway view(90°/270°)
Alarm Interface	In/Out	2 configurable I/O ports
	その他	Support extra alarm I/O via optional I/O box
Alarm Triggers		分析, ネットワーク切断, アラーム入力, タイムスケジュール, MQTT購読, デイ/ナイト, ストレージデバイスの停止
Alarm Events When Alarm Trigger Occurred		File upload(image): e-mail/FTP/SFTP, File upload(video clip): FTP/SFTP, Notification: e-mail, Recording: SD/SDHC/SDXC or NAS recording at event triggers,アラーム出力, Handover: PTZ preset,send message by HTTP/HTTPS/TCP,Audio clip playback, MQTT: publication
オーディオ入力		Selectable(mic in/line in)
オーディオ出力		Line out
Light Type		IR LED
Light Viewable Length	IR	WiseIR 50m(164.04ft)
IR Wavelength		850nm

分析

Classified Object Type		人, 顔, 車両, ナンバープレート
属性	人	Upper/Lower clothes color, 性別, カバン
	車両	Type(car, bus, truck, motorcycle, bicycle), カラー
	顔	年齢, 性別, 顔マスク, メガネ
Similarity Search		Support

Design and specifications are subject to change without notice. The latest product information / specification can be found at HanwhaVision.com
Hanwha Vision is formerly known as Hanwha Techwin.

© Hanwha Vision CO., LTD. All rights reserved.

分析

サムネイル		ベストショット
分析イベント	Based on AI Engine	対象物検知, 仮想線（交差·方向）, モーション検知, マスク検知, ソーシャルディスタンス検知, 転倒検知, 仮想領域（ローターリング、侵入、Enter、Exit、Appear、Disappear）
	通常	焦点ぼけ検知, タンパリング, 音声検出, 衝撃検知
Business Intelligence	Based on AI Engine	人数カウント, キュー管理, ヒートマップ, 車両カウント, 群衆カウント

ネットワーク

Ethernet		Metal shielded RJ-45(10/100BASE-T)
映像圧縮		H.265/H.264: Main/Baseline/High, MJPEG
Audio Compression		G.711(PCM): 8kHz(64kbps), G.726(ADPCM): 8kHz(16/24/32/40kbps), AAC-LC: 16kHz(48kbps), OPUS: 48kHz(64kbps)
Smart codec		WiseStream(Based on AI engine)
ビットレートコントロール		H.265/H.264: CBR or VBR, MJPEG: VBR
Streaming	Unicast	最大 20ユーザー
	マルチキャスト	サポート
	Multiple Streaming	最大 5プロファイル, 3 virtual channel support
プロトコル		IPv4, IPv6, TCP/IP, UDP/IP, RTP(UDP), RTP(TCP), RTCP, RTSP, NTP, HTTP, HTTPS, SSL/TLS, DHCP, FTP, SFTP, ICMP, IGMP, SNMPv1/v2c/v3(MIB-2), ARP, DNS, DDNS, QoS, UPnP, Bonjour, LLDP, CDP, SRTP(TCP, UDP Unicast), MQTT, SMTP(StartTLS), Syslog
Application Programming Interface	ONVIF	s, G, T, M
	その他	SUNAPI(HTTP API), Hanwha Vision Open Platform
Direct Cloud Connection		サポート

セキュリティ

OS / Firmware Protect	Encrypted firmware, Secure boot, Signed firmware
ユーザー認証	ダイジェスト認証, Prevent brute-force attack
Network authentication	IEEE 802.1X(EAP-TLS, EAP-LEAP, EAP-PEAP, MSCHAPv2)
Secure Communication	HTTPS, WSS(WebSocket Secure), SRTP
Access Control	IP-based access control, MAC-based access control, 自動ログアウト
Data Protect	Encryption credentials, Encrypt compress for live recording file export
Audit	Access / System / Event Log management
デバイスID	Device certificate(Hanwha Vision Root CA)
Secure Storage	SDcard partition encrypt(AES-256), Secure element
Supply Chain Security	SBOM
Security Certificate	Secure element(FIPS 140-3 level3, CC EAL6+), ETSI EN 303 645

Design and specifications are subject to change without notice. The latest product information / specification can be found at HanwhaVision.com
Hanwha Vision is formerly known as Hanwha Techwin.

© Hanwha Vision CO., LTD. All rights reserved.

一般

SoC	Type	Wisenet 9
	Dual NPU	Support
メモリ	RAM	4GB
	フラッシュ	8GB eMMC
Edge Storage	Micro SD/SDHC/SDXC	Max. 1TB x 1slot
Edge Storage(OnCloud)	Micro SD/SDHC/SDXC	Max. 1TB x 1slot *Hanwha Vision branded microSD cards have been certified and recommended for OnCloud edge recording.

Environmental & Electrical

動作条件	温度	-10°C~+50°C(+14°F~+122°F)
	湿度	0~100% RH(condensing)
	その他	Humidity control with AIR vent
保管条件	温度	-50°C~+60°C(-58°F~+140°F)
	湿度	0~90% RH(non-condensing)
EPA(Effective Projected Area)		0.02㎡
Input Voltage		PoE(IEEE802.3af, Class3)
消費電力	PoE	Max. 10.2W, typical 5.0W
WisePower		電力モニタリング, Ecoモード

Mechanical

カラー		白
材料		アルミニウム, PC(Polycarbonate), Hard-coated dome
Material Management	Declaration	RoHS(EU RoHS directive 2011/65/EU and IEC/EN 63000:2018), REACH(Regulation (EC) No. 1907/2006), Conflict mineral policy(Section 1502 of US Dodd Frank Act)
	Recycle Rate	Recycled plastic: 10.63%
RAL Code		RAL9003
Product Dimensions		ø160x118mm(6.30x4.65")
Product Weight		1,032g(2.27lb)
Compatible Conduit Hole		12.7mm(1/2")(M20)
Compatible Gang Box		シングル, Double, 4" Octagon, 正方形

Certifications & Standards

EMC	FCC 47 CFR 15 Subpart B Class A, ICES-3(A)/NMB-3(A), CE/UKCA - EN55032 Class A, EN 50130-4, EN 61000-3-2, EN 61000-3-3, VCCI CISPR 32 Class A, RCM AS-NZS CISPR 32 Class A, KS C 9832 Class A, KS C 9835
Safety	UL 62368-1, CAN/CSA C22.2 NO. 62368-1, IEC 62471
環境	IEC/EN 63000, IEC 60529 IP52, IEC 60529 IP55, IEC 62262 IK10, IEC 60068-2-1, IEC 60068-2-2, IEC 60068-2-6, IEC 60068-2-14, IEC 60068-2-27, IEC 60068-2-78

Design and specifications are subject to change without notice. The latest product information / specification can be found at HanwhaVision.com
Hanwha Vision is formerly known as Hanwha Techwin.

© Hanwha Vision CO., LTD. All rights reserved.

AI Detection Distance

Person(1.8m/5.9ft)	Wide	up to 32m(105ft)
	Tele	up to 149m(488ft)
Vehicle(1.45m/4.8ft)	Wide	up to 42m(139ft)
	Tele	up to 197m(645ft)

DORI (EN62676-4 standard)

Detect (25PPM/ 8PPF)	Wide	30.0m(98.43ft)
	Tele	138.5m(454.28ft)
Observe (63PPM/ 19PPF)	Wide	12.0m(39.37ft)
	Tele	55.4m(181.71ft)
Recognize (125PPM/ 38PPF)	Wide	6.0m(19.69ft)
	Tele	27.7m(90.86ft)
Identify (250PPM/ 76PPF)	Wide	3.0m(9.84ft)
	Tele	13.8m(45.43ft)

Design and specifications are subject to change without notice. The latest product information / specification can be found at HanwhaVision.com
Hanwha Vision is formerly known as Hanwha Techwin.

© Hanwha Vision CO., LTD. All rights reserved.

XND-A6084RV

2MP AI IRドームカメラ

CAD

Unit: mm [inch]

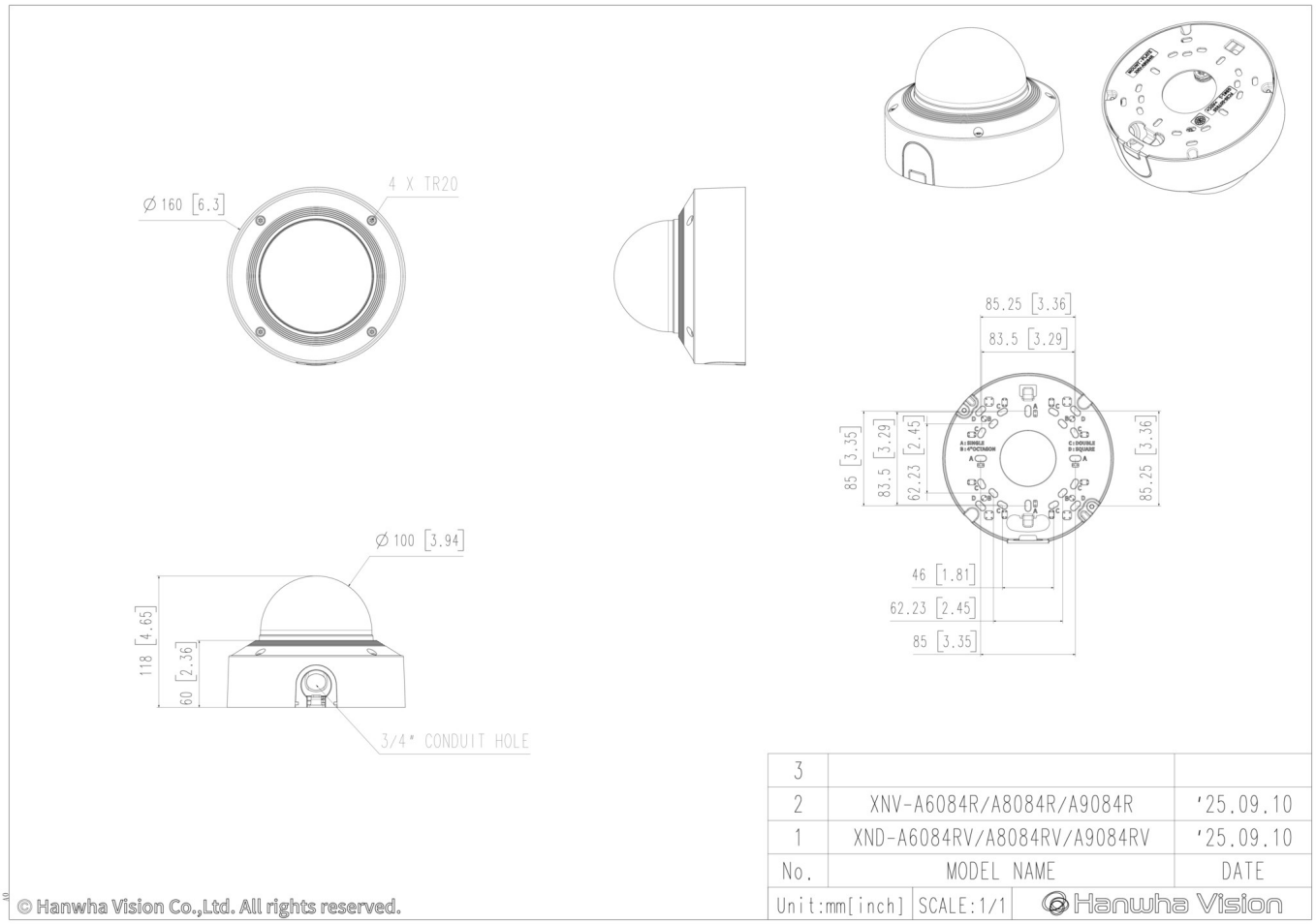

© Hanwha Vision CO., LTD. All rights reserved.

Compatible Devices

SBP-160HMW1

SBP-140CMB

SBP-180CMB

SBP-180CMS

SBP-150CMP

SBP-300CMP

SBP-900CMP

SBP-C15H

SBP-C15NP

SBP-C35H

SBP-C15P

SBP-150CMI

SBP-300CMI

SBP-300CMW1

SBP-900CMW

SBP-300CMTW

SBP-300CMTS

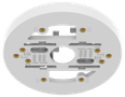
SBP-140CMT

SHD-1600FW

SHD-1602FPW

SBP-250WMW

SBP-400WMW

SBP-115PFA

SBP-160TMW1

SBV-180WW

SBP-150PMW

SBD-180PMW

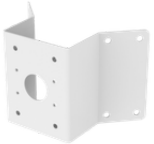
SBP-156KMW

SBP-156LMW1

SBP-150NBW

SPB-VAN88W

SPP-C7400

SPP-C45W

Design and specifications are subject to change without notice. The latest product information / specification can be found at HanwhaVision.com
Hanwha Vision is formerly known as Hanwha Techwin.

© Hanwha Vision CO., LTD. All rights reserved.