

Network Dome

XND-A6084RV

2MP AI IR Dome Camera

Key Features

- 2MP Image Resolution
- 2.8~12mm Focal Length
- 50m IR Length
- IP52, IK10 Rated
- Dual NPU for AI-based Image Enhancement
- AI-based Analytics and Business Intelligence

Design and specifications are subject to change without notice. The latest product information / specification can be found at HanwhaVision.com
Hanwha Vision is formerly known as Hanwha Techwin.

© Hanwha Vision CO., LTD. All rights reserved.

XND-A6084RV

2MP AI IR Dome Camera



Specifications

Video

Imaging Device	Size	1/2.8"
	Type	CMOS
Resolution		1920x1080, 1280x1024, 1280x960, 1280x720, 1024x768, 960x540, 800x600, 800x448, 720x576, 720x480, 640x480, 640x360, 320x240, 320x180
Max. Framerate	H.265/H.264	60fps/50fps(60Hz/50Hz)
	MJPEG	30fps
Min. Illumination (Lux)	Color(1/30sec, 30IRE)	0.02
	BW(1/30sec, 30IRE)	0.002
Video Out		USB: USB Type C. Preview and installation ONLY. Requires WiFi dongle.

Lens

Focal Length (mm)		2.8~12
Zoom Ratio	Optical	4.3x
Max Aperture Ratio (F number)	Wide	1.4
	Tele	3.6
Angular Field of View	Horizontal	120°~27°
	Vertical	63°~15°
	Diagonal	143°~32°
Min. Object Distance		0.5m(1.64ft)
Focus Control		Simple focus, Manual
Lens Type		P iris(IR corrected)

Pan / Tilt / Rotate

Pan / Tilt / Rotate Range	Pan	0°~360°
	Tilt	0°~75°
	Rotate	0°~355°

Operational

Day & Night	Auto(ICR)
Backlight Compensation	BLC, HLC, WDR, SSDR

Design and specifications are subject to change without notice. The latest product information / specification can be found at HanwhaVision.com
Hanwha Vision is formerly known as Hanwha Techwin.

© Hanwha Vision CO., LTD. All rights reserved.

Operational

Wide Dynamic Range (dB)		150
Digital Noise Reduction		WiseNR II (Based on AI engine), SSNR V
Digital Image Stabilization		Support
Defog		Support
Motion Detection	Quantity	8ea
	Shape	8point Polygonal zones
Privacy Masking	Quantity	32ea
	Shape	8point Polygonal zones
	Color / Option	Gray, Green, Red, Blue, Black, White, Mosaic, Purple, Yellow
	Dynamic Privacy Masking: Color / Option	Gray, Green, Red, Blue, Black, White, Mosaic, Purple, Yellow
Gain Control		Off, Max gain, Manual
White Balance		ATW, NarrowATW, AWC, Manual, Indoor, Outdoor
LDC		Support(Fill/stretch mode)
Electronic Shutter	Mode	Minimum, Maximum, Anti flicker, Prefer shutter control(Based on AI engine)
	Speed Range	2~1/40,000sec
Video Rotation		Flip, Mirror, Hallway view(90°/270°)
Alarm Interface	In/Out	2 configurable I/O ports
	Others	Support extra alarm I/O via optional I/O box
Alarm Triggers		Analytics, Network disconnect, Alarm input, Time schedule, MQTT subscription, Day/Night, Storage disruption
Alarm Events When Alarm Trigger Occurred		File upload(image): e-mail/FTP/SFTP, File upload(video clip): FTP/SFTP, Notification: e-mail, Recording: SD/SDHC/SDXC or NAS recording at event triggers,Alarm output, Handover: PTZ preset,send message by HTTP/HTTPS/TCP,Audio clip playback, MQTT: publication
Audio In		Selectable(mic in/line in)
Audio Out		Line out
Light Type		IR LED
Light Viewable Length	IR	WiseIR 50m(164.04ft)
IR Wavelength		850nm

Analytics

Classified Object Type		Person, Face, Vehicle, License plate
Attributes	Person	Upper/Lower clothes color, Gender, Bag
	Vehicle	Type(car, bus, truck, motorcycle, bicycle), Color
	Face	Age, Gender, Face mask, Glasses
Similarity Search		Support
Thumbnail		BestShot

Design and specifications are subject to change without notice. The latest product information / specification can be found at HanwhaVision.com
Hanwha Vision is formerly known as Hanwha Techwin.

© Hanwha Vision CO., LTD. All rights reserved.

Analytics

Analytics Events	Based on AI Engine	Object detection, Virtual line(Crossing/Direction), Motion detection, Face mask detection, Social distancing detection, Slip & fall detection, Virtual area(Loitering/Intrusion/Enter/Exit/Appear/Disappear)
	Normal	Defocus detection, Tampering, Audio detection, Shock detection
Business Intelligence	Based on AI Engine	People counting, Queue management, Heatmap, Vehicle counting, Crowd counting

Network

Ethernet		Metal shielded RJ-45(10/100BASE-T)
Video Compression		H.265: Main, H.264: Main/Baseline/High,MJPEG
Audio Compression		G.711(PCM): 8kHz(64kbps), G.726(ADPCM): 8kHz(16/24/32/40kbps), AAC-LC: 16kHz(48kbps), OPUS: 48kHz(64kbps)
Smart Codec		WiseStream(Based on AI engine)
Bitrate Control		H.265/H.264: CBR or VBR, MJPEG: VBR
Streaming	Unicast	Up to 20 users
	Multicast	Support
	Multiple Streaming	Up to 5 profiles, 3 virtual channel support
Protocol		IPv4, IPv6, TCP/IP, UDP/IP, RTP(UDP), RTP(TCP), RTCP, RTSP, NTP, HTTP, HTTPS, SSL/TLS, DHCP, FTP, SFTP, ICMP, IGMPv1/v2/v3, SNMPv1/v2c/v3(MIB-2), ARP, DNS, DDNS, QoS, UPnP, Bonjour, LLDP, CDP, SRTP(TCP, UDP Unicast), MQTT, SMTP(StartTLS), Syslog
Application Programming Interface	ONVIF	S, G, T, M
	Others	SUNAPI(HTTP API), Hanwha Vision Open Platform
Direct Cloud Connection		Support

Security

OS / Firmware Protect	Encrypted firmware, Secure boot, Signed firmware
User authentication	Digest authentication, Prevent brute-force attack
Network authentication	IEEE 802.1X(EAP-TLS, EAP-LEAP, EAP-PEAP, MSCHAPv2)
Secure Communication	HTTPS, WSS(WebSocket Secure), SRTP
Access Control	IP-based access control, MAC-based access control, Auto logout
Data Protect	Encryption credentials, Encrypt compress for live recording file export
Audit	Access / System / Event Log management
Device ID	Device certificate(Hanwha Vision Root CA)
Secure Storage	SDcard partition encrypt(AES-256), Secure element
Supply Chain Security	SBOM
Security Certificate	Secure element(FIPS 140-3 level3, CC EAL6+), Consumer IoT Security Standard (ETSI EN 303 645)

Design and specifications are subject to change without notice. The latest product information / specification can be found at HanwhaVision.com
Hanwha Vision is formerly known as Hanwha Techwin.

© Hanwha Vision CO., LTD. All rights reserved.

General

SoC	Type	Wisenet 9
	Dual NPU	Support
Memory	RAM	4GB
	Flash	8GB eMMC
Edge Storage	Micro SD/SDHC/SDXC	Max. 1TB x 1slot
Edge Storage(OnCloud)	Micro SD/SDHC/SDXC	Max. 1TB x 1slot *Hanwha Vision branded microSD cards have been certified and recommended for OnCloud edge recording.

Environmental & Electrical

Operating Condition	Temperature	-10°C~+50°C(+14°F~+122°F)
	Humidity	0~100% RH(condensing)
	Others	Humidity control with AIR vent, Built-in heater
Storage Condition	Temperature	-50°C~+60°C(-58°F~+140°F)
	Humidity	0~90% RH(non-condensing)
EPA(Effective Projected Area)		0.02㎡
Input Voltage		PoE(IEEE802.3af, Class3)
Power Consumption	PoE	Max. 10.2W, typical 5.0W
WisePower		Power monitoring, Eco mode

Mechanical

Color		White
Material		Aluminum, PC(Polycarbonate), Hard-coated dome
Material Management	Declaration	RoHS(EU RoHS directive 2011/65/EU and IEC/EN 63000:2018), REACH(Regulation (EC) No. 1907/2006), Conflict mineral policy(Section 1502 of US Dodd Frank Act)
	Recycle Rate	Recycled plastic: 10.63%
RAL Code		RAL9003
Product Dimensions		ø160x118mm(6.30x4.65")
Product Weight		1,032g(2.27lb)
Compatible Conduit Hole		12.7mm(1/2")(M20)
Compatible Gang Box		Single, Double, 4" Octagon, Square

Certifications & Standards

EMC	FCC 47 CFR 15 Subpart B Class A, ICES-3(A)/NMB-3(A), CE/UKCA - EN55032 Class A, EN 50130-4, EN 61000-3-2, EN 61000-3-3, VCCI CISPR 32 Class A, RCM AS-NZS CISPR 32 Class A, KS C 9832 Class A, KS C 9835
Safety	UL 62368-1, CAN/CSA C22.2 NO. 62368-1, IEC 62471
Environment	IEC/EN 63000, IEC 60529 IP52, IEC 60529 IP55, IEC 62262 IK10, IEC 60068-2-1, IEC 60068-2-2, IEC 60068-2-6, IEC 60068-2-14, IEC 60068-2-27, IEC 60068-2-78

Design and specifications are subject to change without notice. The latest product information / specification can be found at HanwhaVision.com
Hanwha Vision is formerly known as Hanwha Techwin.

© Hanwha Vision CO., LTD. All rights reserved.

AI Detection Distance

Person(1.8m/5.9ft)	Wide	up to 32m(105ft)
	Tele	up to 149m(488ft)
Vehicle(1.45m/4.8ft)	Wide	up to 42m(139ft)
	Tele	up to 197m(645ft)

DORI (EN62676-4 standard)

Detect (25PPM/ 8PPF)	Wide	30.0m(98.43ft)
	Tele	138.5m(454.28ft)
Observe (63PPM/ 19PPF)	Wide	12.0m(39.37ft)
	Tele	55.4m(181.71ft)
Recognize (125PPM/ 38PPF)	Wide	6.0m(19.69ft)
	Tele	27.7m(90.86ft)
Identify (250PPM/ 76PPF)	Wide	3.0m(9.84ft)
	Tele	13.8m(45.43ft)

Design and specifications are subject to change without notice. The latest product information / specification can be found at HanwhaVision.com
Hanwha Vision is formerly known as Hanwha Techwin.

© Hanwha Vision CO., LTD. All rights reserved.

XND-A6084RV

2MP AI IR Dome Camera



CAD

Unit: mm [inch]

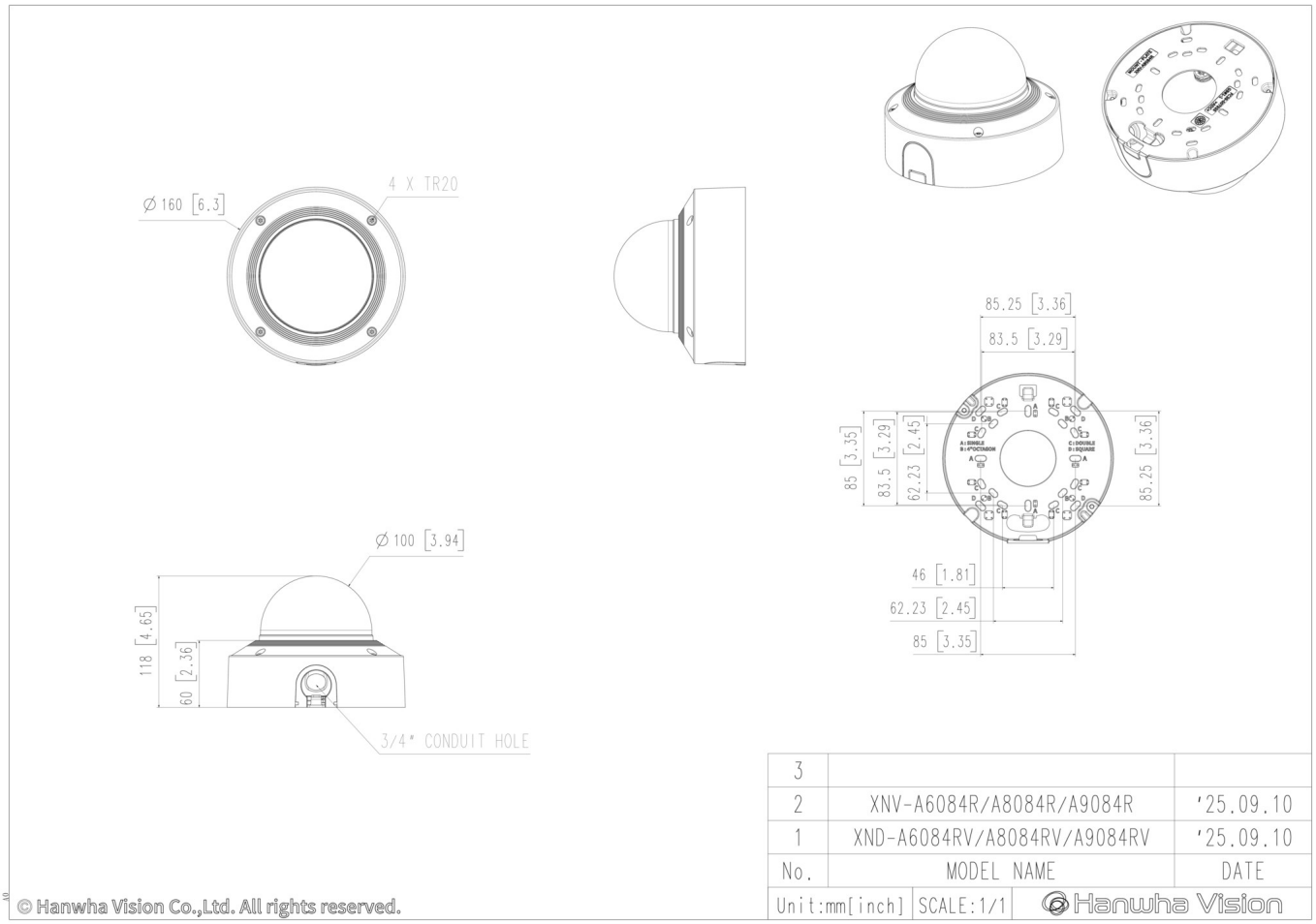

No.	MODEL NAME	DATE
3		
2	XNV-A6084R/A8084R/A9084R	'25.09.10
1	XND-A6084RV/A8084RV/A9084RV	'25.09.10

Unit:mm[inch] | SCALE:1/1 | Hanwha Vision

© Hanwha Vision Co.,Ltd. All rights reserved.

Compatible Devices


SBP-160HMW1


SBP-140CMB


SBP-180CMB


SBP-180CMS

SBP-150CMP

SBP-300CMP

SBP-900CMP

SBP-C15H


SBP-C15NP


SBP-C35H


SBP-C15P


SBP-150CMI


SBP-300CMI


SBP-300CMW1


SBP-900CMW

SBP-300CMTW


SBP-300CMTS


SBP-140CMT


SHD-1600FW


SBP-160WMW1


SBP-250WMW


SBP-400WMW


SBP-115PFA


SBP-160TMW1


SBV-180BW


SBV-180WW


SBP-150PMW


SBD-180PMW


SBP-156KMW


SBP-156LMW1


SBP-150NBW


SPB-VAN88W


SPP-C7400


SPP-C45W

Design and specifications are subject to change without notice. The latest product information / specification can be found at HanwhaVision.com
Hanwha Vision is formerly known as Hanwha Techwin.

© Hanwha Vision CO., LTD. All rights reserved.