

Network Dome

XND-A8084RV

5MP AI IR Dome Camera

Key Features

- 5MP Image Resolution
- 3.3~9.3mm Focal Length
- 50m IR Length
- IP52, IK10 Rated

• 3.3~9.3mm (2.8x) motorized varifocal
• Dual NPU for AI-based Image enhancement
• Analytics events based on AI engine :
Object detection (Person/Face/Vehicle/License plate),
IVA (Virtual line/Area, Enter/Exit, Loitering, Direction, Intrusion),
Slip&Fall detection, Face mask detection,
Social distancing detection, Motion detection
• Business intelligence based on AI engine :
People/Vehicle/Crowd counting, Queue management, Heatmap
• Support BestShot and full attributes
• Support Dynamic Privacy Masking
• extremeWDR, WiseNR II (Based on AI engine),
WiseStream(Based on AI engine)
• WiseIR: IR viewable length 50 m (164.04 ft)
• Support Wisepower(Power monitoring, ECO mode)
• Use recycled plastic
• Device certificate(Hanwha Vision Root CA),
Secure storage
(Secure element with FIPS 140-3 level3/CC EAL6+ certified), SBOM

Design and specifications are subject to change without notice. The latest product information / specification can be found at HanwhaVision.com
Hanwha Vision is formerly known as Hanwha Techwin.

© Hanwha Vision CO., LTD. All rights reserved.

XND-A8084RV

5MP AI IR Dome Camera



Specifications

Video

Imaging Device	Size	1/2.8"
	Type	CMOS
Resolution		2560x1920, 2560x1440, 1920x1080, 1600x1200, 1280x1024, 1280x960, 1280x720, 1024x768, 960x540, 800x600, 800x448, 720x576, 720x480, 640x480, 640x360, 320x240, 320x180
Max. Framerate	H.265/H.264	30fps/25fps(60Hz/50Hz)
	MJPEG	30fps(@5MP Max. 5fps)
Min. Illumination (Lux)	Color(1/30sec, 30IRE)	0.04
	BW(1/30sec, 30IRE)	0.004
Video Out		USB: USB Type C. Preview and installation ONLY. Requires WiFi dongle.

Lens

Focal Length (mm)		3.3~9.3
Zoom Ratio	Optical	2.8x
Max Aperture Ratio (F number)	Wide	1.3
	Tele	2.3
Angular Field of View	Horizontal	99°~31°
	Vertical	71°~23°
	Diagonal	133°~39°
Min. Object Distance		0.5m(1.64ft)
Focus Control		Simple focus, Manual
Lens Type		P iris(IR corrected)

Pan / Tilt / Rotate

Pan / Tilt / Rotate Range	Pan	0°~360°
	Tilt	0°~75°
	Rotate	0°~355°

Operational

Day & Night	Auto(ICR)
Backlight Compensation	BLC, HLC, WDR, SSDR

Design and specifications are subject to change without notice. The latest product information / specification can be found at HanwhaVision.com
Hanwha Vision is formerly known as Hanwha Techwin.

© Hanwha Vision CO., LTD. All rights reserved.

Operational

Wide Dynamic Range (dB)		120
Digital Noise Reduction		WiseNR II (Based on AI engine), SSNR V
Digital Image Stabilization		Support
Defog		Support
Motion Detection	Quantity	8ea
	Shape	8point Polygonal zones
Privacy Masking	Quantity	32ea
	Shape	8point Polygonal zones
	Color / Option	Gray, Green, Red, Blue, Black, White, Mosaic, Purple, Yellow
	Dynamic Privacy Masking: Color / Option	Gray, Green, Red, Blue, Black, White, Mosaic, Purple, Yellow
Gain Control		Off, Max gain, Manual
White Balance		ATW, NarrowATW, AWC, Manual, Indoor, Outdoor
LDC		Support(Fill/stretch mode)
Electronic Shutter	Mode	Minimum, Maximum, Anti flicker, Prefer shutter control(Based on AI engine)
	Speed Range	2~1/30,000sec
Video Rotation		Flip, Mirror, Hallway view(90°/270°)
Alarm Interface	In/Out	2 configurable I/O ports
	Others	Support extra alarm I/O via optional I/O box
Alarm Triggers		Analytics, Network disconnect, Alarm input, Time schedule, MQTT subscription, Day/Night, Storage disruption
Alarm Events When Alarm Trigger Occurred		File upload(image): e-mail/FTP/SFTP, File upload(video clip): FTP/SFTP, Notification: e-mail, Recording: SD/SDHC/SDXC or NAS recording at event triggers,Alarm output, Handover: PTZ preset,send message by HTTP/HTTPS/TCP,Audio clip playback, MQTT: publication
Audio In		Selectable(mic in/line in)
Audio Out		Line out
Light Type		IR LED
Light Viewable Length	IR	WiseIR 50m(164.04ft)
IR Wavelength		850nm

Analytics

Classified Object Type		Person, Face, Vehicle, License plate
Attributes	Person	Upper/Lower clothes color, Gender, Bag
	Vehicle	Type(car, bus, truck, motorcycle, bicycle), Color
	Face	Age, Gender, Face mask, Glasses
Similarity Search		Support
Thumbnail		BestShot

Design and specifications are subject to change without notice. The latest product information / specification can be found at HanwhaVision.com
Hanwha Vision is formerly known as Hanwha Techwin.

© Hanwha Vision CO., LTD. All rights reserved.

Analytics

Analytics Events	Based on AI Engine	Object detection, Virtual line(Crossing/Direction), Motion detection, Face mask detection, Social distancing detection, Slip & fall detection, Virtual area(Loitering/Intrusion/Enter/Exit/Appear/Disappear)
	Normal	Defocus detection, Tampering, Audio detection, Shock detection
Business Intelligence	Based on AI Engine	People counting, Queue management, Heatmap, Vehicle counting, Crowd counting

Network

Ethernet		Metal shielded RJ-45(10/100BASE-T)
Video Compression		H.265: Main, H.264: Main/Baseline/High,MJPEG
Audio Compression		G.711(PCM): 8kHz(64kbps), G.726(ADPCM): 8kHz(16/24/32/40kbps), AAC-LC: 16kHz(48kbps), OPUS: 16kHz(64kbps)
Smart Codec		WiseStream(Based on AI engine)
Bitrate Control		H.265/H.264: CBR or VBR, MJPEG: VBR
Streaming	Unicast	Up to 20 users
	Multicast	Support
	Multiple Streaming	Up to 5 profiles, 3 virtual channel support
Protocol		IPv4, IPv6, TCP/IP, UDP/IP, RTP(UDP), RTP(TCP), RTCP, RTSP, NTP, HTTP, HTTPS, SSL/TLS, DHCP, FTP, SFTP, ICMP, IGMPv1/v2/v3, SNMPv1/v2c/v3(MIB-2), ARP, DNS, DDNS, QoS, UPnP, Bonjour, LLDP, CDP, SRTP(TCP, UDP Unicast), MQTT, SMTP(StartTLS), Syslog
Application Programming Interface	ONVIF	S, G, T, M
	Others	SUNAPI(HTTP API), Hanwha Vision Open Platform

Security

OS / Firmware Protect	Encrypted firmware, Secure boot, Signed firmware
User authentication	Digest authentication, Prevent brute-force attack
Network authentication	IEEE 802.1X(EAP-TLS, EAP-LEAP, EAP-PEAP, MSCHAPv2)
Secure Communication	HTTPS, WSS(WebSocket Secure), SRTP
Access Control	IP-based access control, MAC-based access control, Auto logout
Data Protect	Encryption credentials, Encrypt compress for live recording file export
Audit	Access / System / Event Log management
Device ID	Device certificate(Hanwha Vision Root CA)
Secure Storage	SDcard partition encrypt(AES-256), Secure element
Supply Chain Security	SBOM
Security Certificate	Secure element(FIPS 140-3 level3, CC EAL6+), Consumer IoT Security Standard (ETSI EN 303 645), Security Built-in Process Certification (IEC 62443-4-1)

Design and specifications are subject to change without notice. The latest product information / specification can be found at HanwhaVision.com
Hanwha Vision is formerly known as Hanwha Techwin.

© Hanwha Vision CO., LTD. All rights reserved.

General

SoC	Type	Wisenet 9
	Dual NPU	Support
Memory	RAM	4GB
	Flash	8GB eMMC
Edge Storage	Micro SD/SDHC/SDXC	Max. 1TB x 1slot

Environmental & Electrical

Operating Condition	Temperature	-10°C~+50°C(+14°F~+122°F)
	Humidity	0~100% RH(condensing)
	Others	Humidity control with AIR vent, Built-in heater
Storage Condition	Temperature	-50°C~+60°C(-58°F~+140°F)
	Humidity	0~90% RH(non-condensing)
EPA(Effective Projected Area)		0.02㎡
Input Voltage		PoE(IEEE802.3af, Class3)
Power Consumption	PoE	Max. 9.4W, typical 7.0W
WisePower		Power monitoring, Eco mode

Mechanical

Color		White
Material		Aluminum, PC(Polycarbonate), Hard-coated dome
Material Management	Declaration	RoHS(EU RoHS directive 2011/65/EU and IEC/EN 63000:2018), REACH(Regulation (EC) No. 1907/2006), Conflict mineral policy(Section 1502 of US Dodd Frank Act)
	Recycle Rate	Recycled plastic: 10.72%
RAL Code		RAL9003
Product Dimensions		ø160x118mm(6.30x4.65")
Product Weight		1,010g(2.23lb)
Compatible Conduit Hole		12.7mm(1/2")(M20)
Compatible Gang Box		Single, Double, 4" Octagon, Square

Certifications & Standards

EMC	FCC 47 CFR 15 Subpart B Class A, ICES-3(A)/NMB-3(A), CE/UKCA - EN55032 Class A, EN 50130-4, EN 61000-3-2, EN 61000-3-3, VCCI CISPR 32 Class A, RCM AS-NZS CISPR 32 Class A, KS C 9832 Class A, KS C 9835
Safety	UL 62368-1, CAN/CSA C22.2 NO. 62368-1, IEC 62471
Environment	IEC/EN 63000, IEC 60529 IP52, IEC 60529 IP55, IEC 62262 IK10, IEC 60068-2-1, IEC 60068-2-2, IEC 60068-2-6, IEC 60068-2-14, IEC 60068-2-27, IEC 60068-2-78

AI Detection Distance

Person(1.8m/5.9ft)	Wide	up to 27m(90ft)
	Tele	up to 96m(316ft)

Design and specifications are subject to change without notice. The latest product information / specification can be found at HanwhaVision.com
Hanwha Vision is formerly known as Hanwha Techwin.

© Hanwha Vision CO., LTD. All rights reserved.

AI Detection Distance

Vehicle(1.45m/4.8ft)	Wide	up to 36m(119ft)
	Tele	up to 127m(418ft)

DORI (EN62676-4 standard)

Detect (25PPM/ 8PPF)	Wide	43.7m(143.47ft)
	Tele	184.6m(605.71ft)
Observe (63PPM/ 19PPF)	Wide	17.5m(57.39ft)
	Tele	73.8m(242.29ft)
Recognize (125PPM/ 38PPF)	Wide	8.7m(28.69ft)
	Tele	36.9m(121.14ft)
Identify (250PPM/ 76PPF)	Wide	4.4m(14.35ft)
	Tele	18.5m(60.57ft)

Design and specifications are subject to change without notice. The latest product information / specification can be found at HanwhaVision.com
Hanwha Vision is formerly known as Hanwha Techwin.

© Hanwha Vision CO., LTD. All rights reserved.

XND-A8084RV

5MP AI IR Dome Camera



CAD

Unit: mm [inch]

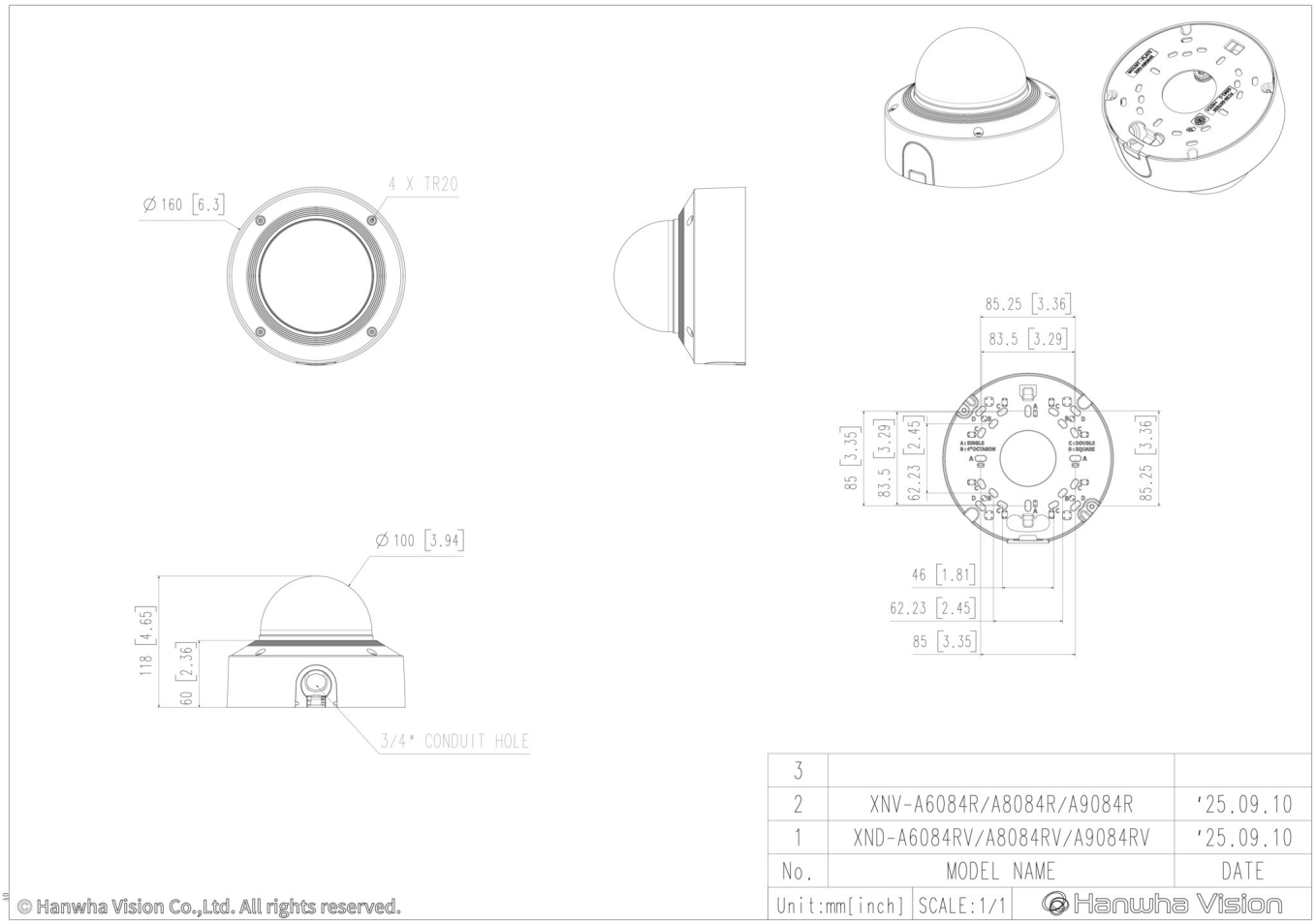

No.	MODEL NAME	DATE
3		
2	XNV-A6084R/A8084R/A9084R	'25.09.10
1	XND-A6084RV/A8084RV/A9084RV	'25.09.10

Unit:mm[inch] | SCALE:1/1 | Hanwha Vision

© Hanwha Vision Co.,Ltd. All rights reserved.

Compatible Devices



SBP-160HMW1



SBP-140CMB



SBP-180CMB



SBP-180CMS



SBP-150CMP

SBP-300CMP

SBP-900CMP

SBP-C15H



SBP-C15NP



SBP-C35H



SBP-C15P



SBP-150CMI



SBP-300CMI



SBP-300CMW1



SBP-900CMW

SBP-300CMTW



SBP-300CMTS



SBP-140CMT



SHD-1600FW



SHD-1602FPW



SBP-160WMW1



SBP-250WMW



SBP-400WMW



SBP-115PFA



SBP-160TMW1



SBV-180BW



SBV-180WW



SBP-150PMW



SBD-180PMW



SBP-156KMW



SBP-156LMW1



SBP-150NBW



SPB-VAN88W



SPP-C7400



SPP-C45W

Design and specifications are subject to change without notice. The latest product information / specification can be found at HanwhaVision.com
Hanwha Vision is formerly known as Hanwha Techwin.

© Hanwha Vision CO., LTD. All rights reserved.