

Network Fisheye

# XNF-8010RV

6M H.265 Fisheye Camera

## Key Features

- Max. 2048 x 2048 resolution
- H.265, H.264, MJPEG codec supported
- Fisheye, Single panorama, Double panorama, Quad view
- On board dewarping, Digital PTZ (8x), Bi-directional audio
- True WDR (120dB), WiseStream II support
- Video Analytics, Heatmap, People counting
- Queue management
- Motion detection, Handover, M12 (8010RVM), IP66/IK10

Design and specifications are subject to change without notice. The latest product information / specification can be found at HanwhaVision.com
Hanwha Vision is formerly known as Hanwha Techwin.

© Hanwha Vision CO., LTD. All rights reserved.

# XNF-8010RV

6M H.265 Fisheye Camera



## Specifications

### Video

| | | |
|---|---|---|
| **Imaging Device** | Size | 1/1.8" |
| | Type | CMOS |
| **Resolution** | | 2048x2048, 2048x1536, 2048x1024, 2048x512, 1920x960, 1920x480, 1600x1200, 1280x1280, 1280x960, 1280x640, 1280x320, 1080x1080, 1024x768, 960x960, 800x600, 768x768, 720x720, 720x576, 704x352, 704x176, 640x480, 640x320, 640x160, 480x480 |
| **Max. Framerate** | H.265/H.264 | 30fps/25fps(60Hz/50Hz) |
| | MJPEG | 15fps |
| **Min. Illumination (Lux)** | Color(1/30sec, 30IRE) | 0.1 |
| | BW(1/30sec, 30IRE) | 0.01 |
| **Video Out** | | CVBS: 1.0 Vp-p / 75Ω composite for installation,<br>USB: Micro USB Type B. Preview and installation ONLY. Requires WiFi dongle. |

### Lens

| | | |
|---|---|---|
| **Focal Length (mm)** | | 1.6 |
| **Max Aperture Ratio (F number)** | Wide | 1.6 |
| **Angular Field of View** | Horizontal | 192° |
| | Vertical | 192° |
| | Diagonal | 192° |
| **Min. Object Distance** | | 0.3m(0.98ft) |
| **Focus Control** | | Simple focus |
| **Lens Type** | | Fixed iris |

### Operational

| | | |
|---|---|---|
| **Day & Night** | | Auto(ICR) |
| **Backlight Compensation** | | BLC, HLC, WDR, SSDR |
| **Wide Dynamic Range (dB)** | | 120 |
| **Digital Noise Reduction** | | SSNR V |
| **Defog** | | Support |
| **Motion Detection** | Quantity | 8ea |
| | Shape | 8point Polygonal zones |

Design and specifications are subject to change without notice. The latest product information / specification can be found at HanwhaVision.com
Hanwha Vision is formerly known as Hanwha Techwin.

© Hanwha Vision CO., LTD. All rights reserved.

## Operational

| | | |
|---|---|---|
| **Privacy Masking** | Quantity | 32ea |
| | Shape | 4point Quadrangle zones |
| | Color / Option | Gray, Green, Red, Blue, Black, White, Mosaic |
| **Gain Control** | | Low, Middle, High |
| **White Balance** | | ATW, AWC, Manual, Indoor, Outdoor |
| **Electronic Shutter** | Mode | Minimum, Maximum, Anti flicker |
| | Speed Range | 2~1/12,000sec |
| **Digital PTZ** | | Support |
| **Video Rotation** | | Flip, Mirror |
| **Alarm Interface** | In/Out | Input 1ea, Output 1ea |
| **Alarm Triggers** | | Analytics, Network disconnect, Alarm input |
| **Alarm Events When Alarm Trigger Occurred** | | File upload(image): e-mail/FTP,<br>Notification: e-mail,<br>Recording: SD/SDHC/SDXC or NAS recording at event triggers,Alarm output |
| **Audio In** | | Selectable(mic in/line in), Built-in mic |
| **Audio Out** | | Line out |
| **Light Type** | | IR LED |
| **Light Viewable Length** | IR | 15m(49.21ft) |
| **IR Wavelength** | | 850nm |

## Analytics

| | | |
|---|---|---|
| **Analytics Events** | Normal | Motion detection, Tampering, Audio detection, Sound classification, Virtual area(Lotering, Intrusion, Enter/Exit, Appear/Disappear), Virtual line(Crossing, Direction) |
| **Business Intelligence** | Normal | People counting, Queue management, Heatmap |

## Network

| | | |
|---|---|---|
| **Ethernet** | | Metal shielded RJ-45(10/100BASE-T) |
| **Video Compression** | | H.265: Main,<br>H.264: Main/Baseline/High,MJPEG |
| **Audio Compression** | | G.711 u-law /G.726 selectable,G.726(ADPCM) 8kHz,G.711 8kHz,<br>G.726: 16kbps,24kbps,32kbps,40kbps,<br>AAC-LC: 48kbps at 16kHz |
| **Smart Codec** | | Manual, WiseStream II |
| **Bitrate Control** | | H.265/H.264: CBR or VBR,<br>MJPEG: VBR |
| **Streaming** | Unicast | Up to 20 users |
| | Multicast | Support |
| | Multiple Streaming | Up to 10 profiles |
| **Protocol** | | IPv4, IPv6, TCP/IP, UDP/IP, RTP(UDP), RTP(TCP), RTCP, RTSP, NTP, HTTP, HTTPS, SSL/TLS, DHCP, FTP, SMTP, ICMP, IGMPv2, SNMPv1/v2c/v3(MIB-2), ARP, DNS, DDNS, QoS, UPnP, Bonjour, SRTP(TCP, UDP Unicast), PPPoE |

Design and specifications are subject to change without notice. The latest product information / specification can be found at HanwhaVision.com
Hanwha Vision is formerly known as Hanwha Techwin.

© Hanwha Vision CO., LTD. All rights reserved.

## Network

| | | |
|---|---|---|
| **Application Programming Interface** | ONVIF | S, G, T |
| | Others | SUNAPI(HTTP API), Hanwha Vision Open Platform |
| **Direct Cloud Connection** | | Optional (needs gateway) |

## Security

| | |
|---|---|
| **User authentication** | Digest authentication |
| **Network authentication** | IEEE 802.1X(EAP-TLS, EAP-LEAP) |
| **Secure Communication** | HTTPS |
| **Access Control** | IP-based access control |
| **Data Protect** | Encryption credentials |
| **Audit** | Access / System / Event Log management |

## General

| | | |
|---|---|---|
| **Memory** | RAM | 1GB |
| | Flash | 256MB |
| **Edge Storage** | Micro SD/SDHC/SDXC | Max. 256GB x 2slot(Total 512GB) |

## Environmental & Electrical

| | | |
|---|---|---|
| **Operating Condition** | Temperature | -40°C~+55°C(-40°F~+131°F) |
| | Humidity | 0~90% RH(non-condensing) |
| **Storage Condition** | Temperature | -50°C~+60°C(-58°F~+140°F) |
| | Humidity | 0~90% RH(non-condensing) |
| **Input Voltage** | | PoE(IEEE802.3af, Class3), 12VDC |
| **Power Consumption** | PoE | Max 12.95W |
| | 12VDC | Max 12W |

## Mechanical

| | |
|---|---|
| **Color** | Ivory |
| **Material** | Aluminum |
| **Product Dimensions** | Ø146x65.8mm(Ø5.75x2.59") |
| **Product Weight** | 785g(1.73 lb) |

## Certifications & Standards

| | |
|---|---|
| **Environment** | IEC 60529 IP66, IEC 62262 IK10 |

Design and specifications are subject to change without notice. The latest product information / specification can be found at HanwhaVision.com
Hanwha Vision is formerly known as Hanwha Techwin.

© Hanwha Vision CO., LTD. All rights reserved.

# XNF-8010RV

6M H.265 Fisheye Camera



## CAD

**Unit:** mm [inch]

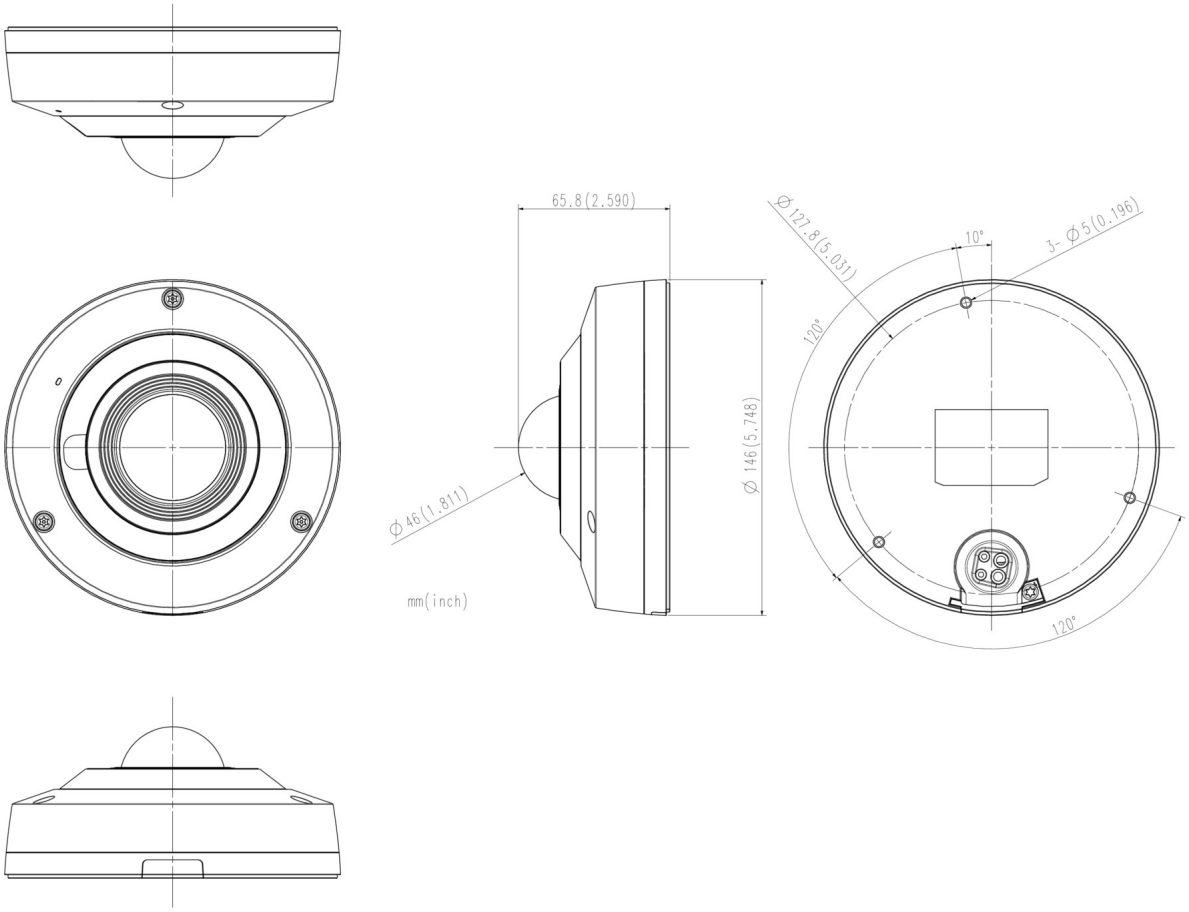


Design and specifications are subject to change without notice. The latest product information / specification can be found at HanwhaVision.com
Hanwha Vision is formerly known as Hanwha Techwin.

© Hanwha Vision CO., LTD. All rights reserved.

## Compatible Devices


SBP-300PM


SBP-300KM


SBP-300HM5


SBP-300LM


SBP-390WM2


SBP-300WM1


SBF-100B1


SBP-300CM


SHD-1600FPW


SBP-300WM


SBP-300NB


SBP-300B


SBP-300TM1

Design and specifications are subject to change without notice. The latest product information / specification can be found at HanwhaVision.com
Hanwha Vision is formerly known as Hanwha Techwin.

© Hanwha Vision CO., LTD. All rights reserved.