TEST REPORT

CTK Co., Ltd.
5 Dongbu-ro 221beon-gil, Cheoin-gu, Yongin-si, Gyeonggi-do, Republic of Korea
Tel: +82-31-339-9970
Fax: +82-31-624-9501

Report No.: CTK-2022-01980

1. Applicant

- Name : Hanwha Techwin Co., Ltd.
- Address : 6 Pangyo-ro 319Beon-gil, Bundang-gu, Seongnam-si, Gyeonggi-do, 13488 KOREA
- Date of Receipt : 2022-06-14

2. Manufacturer

- Name : HANWHA TECHWIN SECURITY VIETNAM CO.,LTD
- Address : Lot O-2, Que Vo Industrial Zone extended area, Nam Son commune, Bac Ninh city, Bac Ninh province, Vietnam

3. Use of Report : Quality control

4. Test sample / Model : Network Camera / XNF-9013RV

5. Date(s) of test : 2022-06-15 to 2022-06-23

6. Location of Test : ☒ Permanent Testing Lab ☐ On Site Testing

Address: (5 Dongbu-ro 221beon-gil, Cheoin-gu, Yongin-si, Gyeonggi-do, Republic of Korea)

7. Test Standard (Method) used : NEMA 250-2014
Enclosures for Electrical Equipment (1000 Volts Maximum)

8. Testing Environment : Temperature: (25.0 ± 5.0) °C
Humidity: (40.0 ± 5.0) %.

9. Test Results : Refer to each test items

The results shown in this test report refer only to the sample(s) tested unless otherwise stated. This Test Report cannot be reproduced, except in full.

The test was conducted as one sample, and the test result does not depend on the number of samples

Approval	Tested by: SooChan Bae (Signature)	Technical Manager: Wonhyeon Choi (Signature)

2022-07-26

CTK Co., Ltd

Test item description.....:	NETWORK CAMERA
Trade Mark.....:	WISENET
Manufacturer .....:	Lot O-2, Que Vo Industrial Zone extended area, Nam Son commune, Bac Ninh city, Bac Ninh province, Vietnam
Model/Type reference.....:	XNF-9013RV
Ratings.....:	Electrical PoE (53 V ⎓ 23.0 W), DC (12 V⎓ 22.0 W) PoE (53 V ⎓ 0.43 A), DC (12 V⎓ 1.83 A) Dimension: Ø 8.55*4 mm by 107.3 mm, Ø 44.14 mm by 138.6 mm, Ø 97.06 mm by 304.7 mm, Ø 16.87 mm by 52.9 mm, Ø 26.83*2 mm by 168.5 mm

List of Attachments (including a total number of pages in each attachment):

Attachment 1: 11-12 pages (Construction Diagram including installation method)

Attachment 2: 13-17 pages (Parts List)

Attachment 3: 18-22 pages (photographs)

Summary of testing:

Tests performed (name of test and test clause): **Clause 5.7(Hose Down Test)**	**Testing location:** CTK Co., Ltd. 5 Dongbu-ro 221beon-gil, Cheoin-gu, Yongin-si, Gyeonggi-do, Republic of Korea

Copy of marking plate: The artwork above may be only a draft.

Test item particulars.....:	Network Camera
Classification of installation and use .....:	Outdoor (Watertight/Corrosion Resistant)
Possible test case verdicts:	
- test case does not apply to the test object .....:	N/A
- test object does meet the requirement.....:	P (Pass)
- test object does not meet the requirement .....:	F (Fail)
- test case does not evaluated to the test object :	N/E

General remarks:

"(See Enclosure #)" refers to additional information appended to the report.
"(See appended table)" refers to a table appended to the report.

Throughout this report a ☐ comma / ☒ point is used as the decimal separator.

Clause numbers between brackets refer to clauses in NEMA 250-2014

Name and address of factory (ies):

1. HANWHA TECHWIN SECURITY VIETNAM CO., LTD
   Lot O-2, Que Vo Industrial Zone extended area, Nam Son commune, Bac Ninh city, Bac Ninh province, Vietnam

2. D-TECH CO., LTD.
   173-25, Saneop-ro, Gwonseon-gu, Suwon-si, Gyeonggi-do, Korea (Suwon Industrial Complex)

General product information:

Applied NEMA Rating : 4X

Model XNF-9013RV is basic model which was tested.

Type 4X	Enclosures constructed for either indoor or outdoor use to provide a degree of protection to personnel against access to hazardous parts; to provide a degree of protection of the equipment inside the enclosure against ingress of solid foreign objects (falling dirt and windblown dust); to provide a degree of protection with respect to harmful effects on the equipment due to the ingress of water (rain, sleet, snow, splashing water, and hose directed water); that provides an increased level of protection against corrosion; and that will be undamaged by the external formation of ice on the enclosure.

Table 2-1
Comparison of Specific Applications of Enclosures for Indoor Nonhazardous (Unclassified) Locations

Provides a Degree of Protection against the Following Conditions	Type of Enclosure									
	1	2	4	4X	5	6	6P	12	12K	13
Access to hazardous parts	X	X	X	X	X	X	X	X	X	X
Ingress of solid foreign objects (falling dirt)	X	X	X	X	X	X	X	X	X	X
Ingress of water (dripping and light splashing)	...	X	X	X	X	X	X	X	X	X
Ingress of solid foreign objects (circulating dust, lint, fibers, and flyings **)	...	...	X	X	...	X	X	X	X	X
Ingress of solid foreign objects (settling airborne dust, lint, fibers, and flyings **)	...	...	X	X	X	X	X	X	X	X
Ingress of water (hosedown and splashing water)	...	...	X	X	...	X	X	...	...	...
Oil and coolant seepage	...	...	...	..	...	...	...	X	X	X
Oil or coolant spraying and splashing	...	...	...	...	...	...	...	...	...	X
Corrosive agents	...	...	...	X	...	...	X	...	...	...
Ingress of water (occasional temporary submersion)	...	...	...	...	...	X	X	...	...	...
Ingress of water (occasional prolonged submersion)	...	...	...	...	...	...	X	...	...	...

** These fibers and flyings are not considered Class III type ignitable fibers or combustible flyings. For Class III type ignitable fibers or flyings see the *National Electrical Code®*, Article 500.5(D).

Table 2-2
Comparison of Specific Applications of Enclosures for Indoor & Outdoor Nonhazardous (Unclassified) Locations

Provides a Degree of Protection Against the Following Conditions	Type of Enclosure									
	3	3X	3R	3RX	3S	3SX	4	4X	6	6P
Access to hazardous parts	X	X	X	X	X	X	X	X	X	X
Ingress of solid foreign objects (falling dirt)	X	X	X	X	X	X	X	X	X	X
Ingress of water (dripping and light splashing)	X	X	X	X	X	X	X	X	X	X
Ingress of water (rain, snow, and sleet **)	X	X	X	X	X	X	X	X	X	X
Sleet ***	...	...	...	...	X	X	...	...	...	...
Ingress of solid foreign objects (windblown dust, lint, fibers, and flyings****)	X	X	...	...	X	X	X	X	X	X
Ingress of water (hosedown and splashing water)	...	...	...	...	...	...	X	X	X	X
Corrosive agents	...	X	...	X	...	X	...	X	...	X
Ingress of water (occasional temporary submersion)	...	...	...	...	...	...	...	...	X	X
Ingress of water (occasional prolonged submersion)	...	...	...	...	...	...	...	...	...	X

** External operating mechanisms are not required to be operable when the enclosure is ice covered.
*** External operating mechanisms are operable when the enclosure is ice covered. See subsection 5.6.
**** These fibers and flyings are not considered Class III type ignitable fibers or combustible flyings. For Class III type ignitable fibers or flyings see the *National Electrical Code®*, Article 500.5(D).

Table 5-1A
Degrees of Protection Against Access to Hazardous Parts

Enclosure Type	Test Conditions	Degree of Protection		Corresponding IP First Characteristic Numeral
		Brief Description	Definition	
4X	5.7	Protected against access to hazardous parts with a wire	An access probe of 1.0 mm shall not penetrate	6

Table 5-1B
Degrees of Protection Against Solid Foreign Objects

Enclosure Type	Test Conditions	Degree of Protection		Corresponding IP First Characteristic Numeral
		Brief Description	Definition	
4X	Non-vented 5.7 Vented 5.5.1 Dust Blast Method	Windblown dust protected	No ingress of dust	6

Table 5-1C
Degrees of Protection against Water

Enclosure Type	Test Conditions	Degree of Protection		Corresponding IP Second Characteristic Numeral
		Brief Description	Definition	
4X	5.7	Protected against hose directed water	Water projected against the enclosure in any direction shall not enter	6 No Ingress Allowed*

Table 5-1D
Additional Protection

Enclosure Type	Test Conditions	Additional Protection		Corresponding IP Second Characteristic Numeral
		Brief Description	Definition	
4X	5.6 5.9 5.10	Special corrosion protection and undamaged by the external formation of ice	Enclosure provides increased corrosion protection and is not damaged by ice that forms on the outside	None

NEMA 250-2014			
Clause	Requirement + Test	Result - Remark	Verdict
3	**CONSTRUCTION**		
3.1	General		P
3.2	Units of Measurement		P
3.3	Materials-General	Enclosures are made of metal or polymeric materials	P
3.4	Materials-Polymeric	More than 650 mm^2 (1 in^2) in area Polymeric Materials used is declared as Min. V-2 Used to UL certified material. (See the attachment 2)	N/E
3.5	Corrosion Protection	Stainless steel and/or aluminium are declared as the materials used (See the attachment 2)	N/E
3.6	Openings	No openings in Product	N/A
3.7	Mounting	Mounting means are external to the equipment cavity (See the attachment 1)	P
3.8	Conduit Connection	No conduit connection (See the attachment 1)	N/A
3.9	Hubs and Fittings	No Hubs and Fittings	N/A
3.10	Knockouts	No Knockouts	N/A
3.11	External Operating Mechanisms	No External Operating Mechanisms	N/A
3.12	Access to Interior	Needs tool to open unit	P
3.13	Closing Hardware	No closing Hardware	N/A
3.14	Gaskets	Gaskets made of a silicone Sponge Rubber (no Elastomeric or Thermoplastic used) (See clause 5.14 and the attachment 2)	P
3.15	Observation Windows	No Observation Window	N/A
4	**MARKING**		

NEMA 250-2014			
Clause	Requirement + Test	Result - Remark	Verdict
4.1	Type Designations	"Type 4X" Marking is declared to be on the product before on the market	P
4.2	Supplemental Markings	Supplemental Marking (watertight/ corrosion resistant) is declared to be used when it is on the market. The required marking shall be added on the product)	P
4.3	Location of Markings	See the Attachment 3	P
4.4	Enclosure Orientation	No Particular Mounting Orientation	N/A
4.5	Conduit Hubs and Closure Plates	No Conduit Hubs and Closure Plates	N/A
4.6	Equipment Openings	No Openings on Unit	N/A
4.7	Drainage Openings	No Drain Openings	N/A
5	**DESIGN TESTS**		
5.1	General	See Table 5-1A to 5-1D and 5.1.5 in the General product information	P
5.2	Tests For Protection Against Access to Hazardous Parts	Rated 4X	N/A
5.3	Tests for Protection Against Ingress of Water (Dripping and Light Splashing)	Rated 4X	N/A
5.4	Tests for Protection Against Ingress of Water (Rain)	Rated 4X	N/A
5.5	Tests for Protection Against Ingress of Solid Foreign Objects (Setting Airborne Dust, Lint, Fibers, And Flings)	Non-vented (See clause 5.7)	N/A
5.6	External Icing Test	No external cavities to trap water when mounted in the normal position.	N/A
5.7	Tests for Protection Against Ingress of Water (Hosedown)	No entry of water See the test information	P
5.8	Indoor Corrosion Protection (Rust-Resistance Test (24-Hour Salt Spray Test))	See clause 3.5	N/E
5.9	Outdoor Corrosion Protection	See clause 3.5	N/E
5.10	Corrosion Protection-Type 3X, 3RX, 3SX, 4X Or 6P Enclosures	See clause 3.5	N/E

NEMA 250-2014			
Clause	Requirement + Test	Result - Remark	Verdict
5.11	Test for Protection Against Ingress of Water (Temporary Submersion)	Rated 4X	N/A
5.12	Test for Protection Against Ingress of Water (Prolonged Submersion)	Rated 4X	N/A
5.13	Oil Exclusion Test	Rated 4X	N/A
5.14	GASKET MATERIAL TESTS	The product itself(including gaskets) was conditioned at 70 ℃ for 168 hrs according to 5.14.3(Alternate Evaluation) before performing relevant required tests.	P
5.15	Test for Sharpness of Edges	No sharp edges	P

NEMA 250-2014			
Clause	Requirement + Test	Result - Remark	Verdict

Test Information

	Hose Down Test: Clause 5.7	**P**

Description of Test

The enclosure and its external mechanisms were subjected to a stream of water from a hose that has a 25.4 mm (1 in) inside diameter nozzle and delivers at least 240 L (65 gal) per minute.

The nozzle was held from 3.0 to 3.5 m (10 to 12 feet) from the enclosure, and the spray of water was directed at all points of potential water entry such as seams, joints, external operating mechanisms, and such. The nozzle was moved along each test point one time at a uniform rate of 6 mm/sec(1/4 in/sec).

Sample Dimension

(Ø 8.55*4 mm by 107.3 mm, Ø 44.14 mm by 138.6 mm,Ø 97.06 mm by 304.7 mm, Ø 16.87 mm by 52.9 mm, Ø 26.83*2 mm by 168.5 mm)

Test Duration = 128 secs

Acceptance conditions:

The enclosure shall be considered to have met the requirements if at the conclusion of the test no water has entered the enclosure

Test Results

Sample No (Model)	Water Flow	Presence of water inside	Result
XNF-9013RV	240 LPM	No	Pass

List of test equipment used:

Instr. Code	Instrument Type	Range Used	Mfr./Model	Calibration Date	
				Last	Due
S3-IP18	25.4mm Nozzle	25.4 mm	CTK/S3-IP18	-	Checked by calliper below before using
S1-SW2	Stop Watch	0.01 s	CASIO/ NONE	2022-02-22	2024-02-21
C-S1-D09	Steel Measuring Tape	5 m	KOMELON/KMC-74N	2021-06-23	2023-06-18
S3-IP23	Water flow meter	250LPM	Nuri tech/ Z-6504	2022-01-04	2023-01-03
C-S1-D02	DIGITAL VERNIER CALIPER	150 mm	MITUTOYO/150 mm	2021-08-28	2022-08-18

Attachment 1 – Construction Diagram and installation method

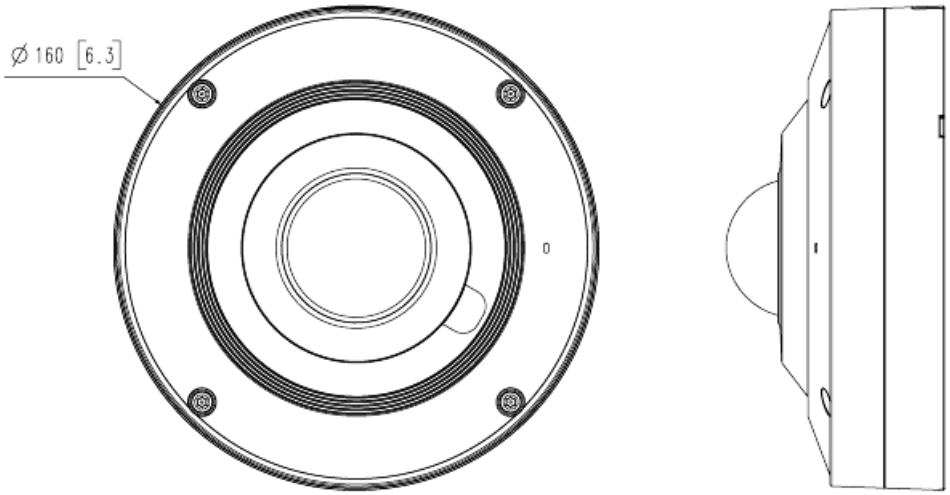

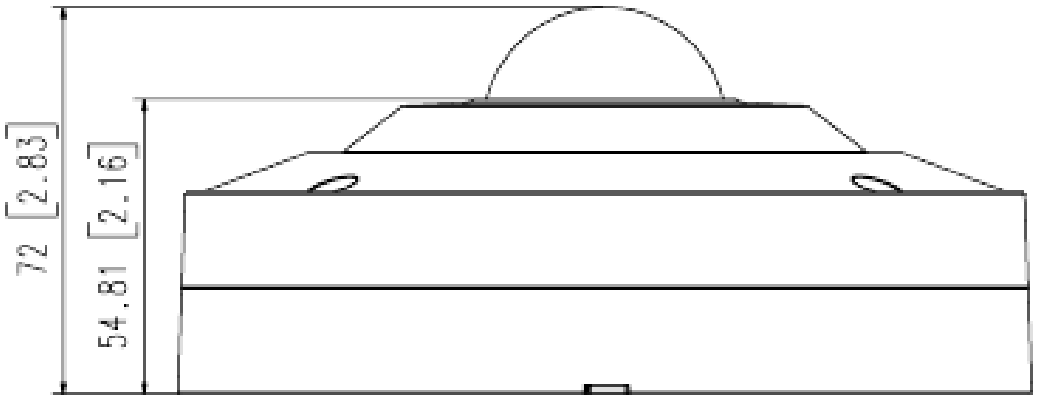

Attachment 1 – Construction Diagram and installation method

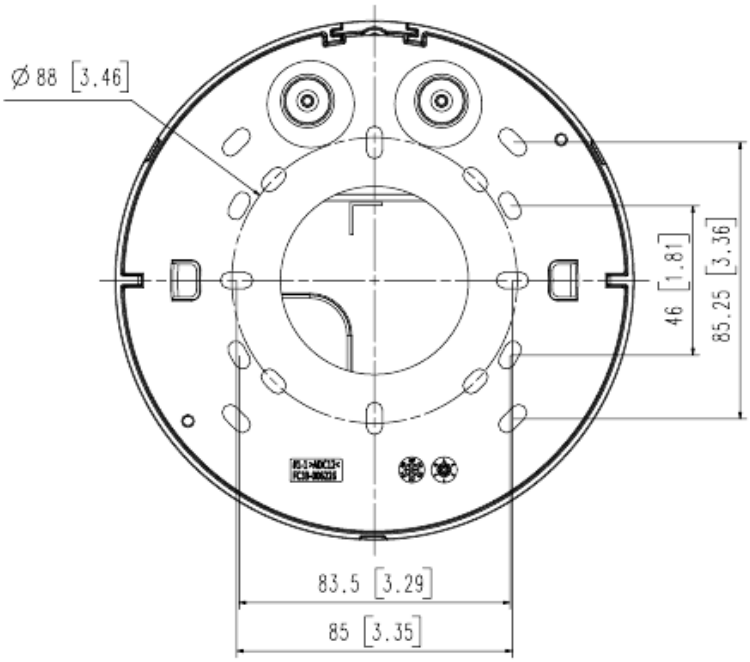

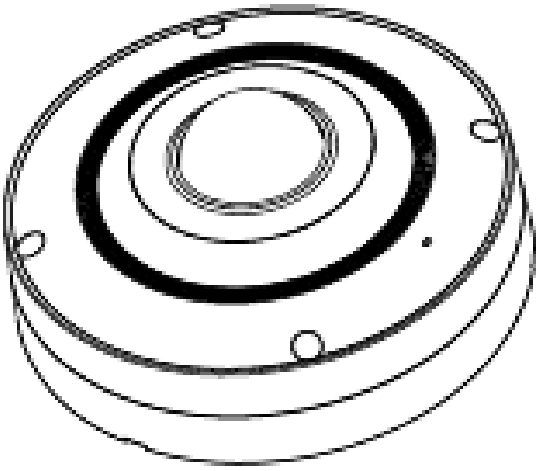

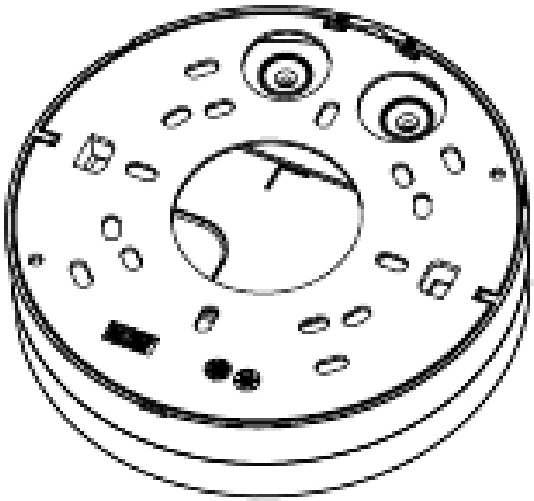

Attachment 2 – Parts List

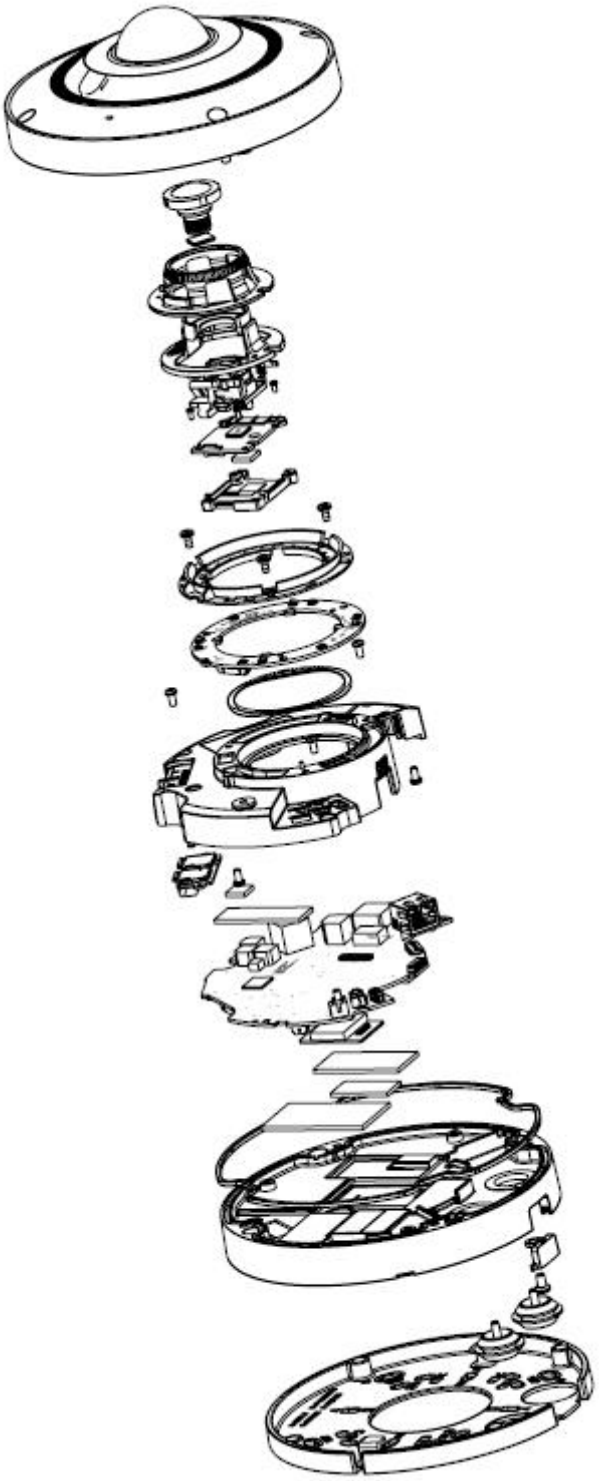

Attachment 2 – Parts List

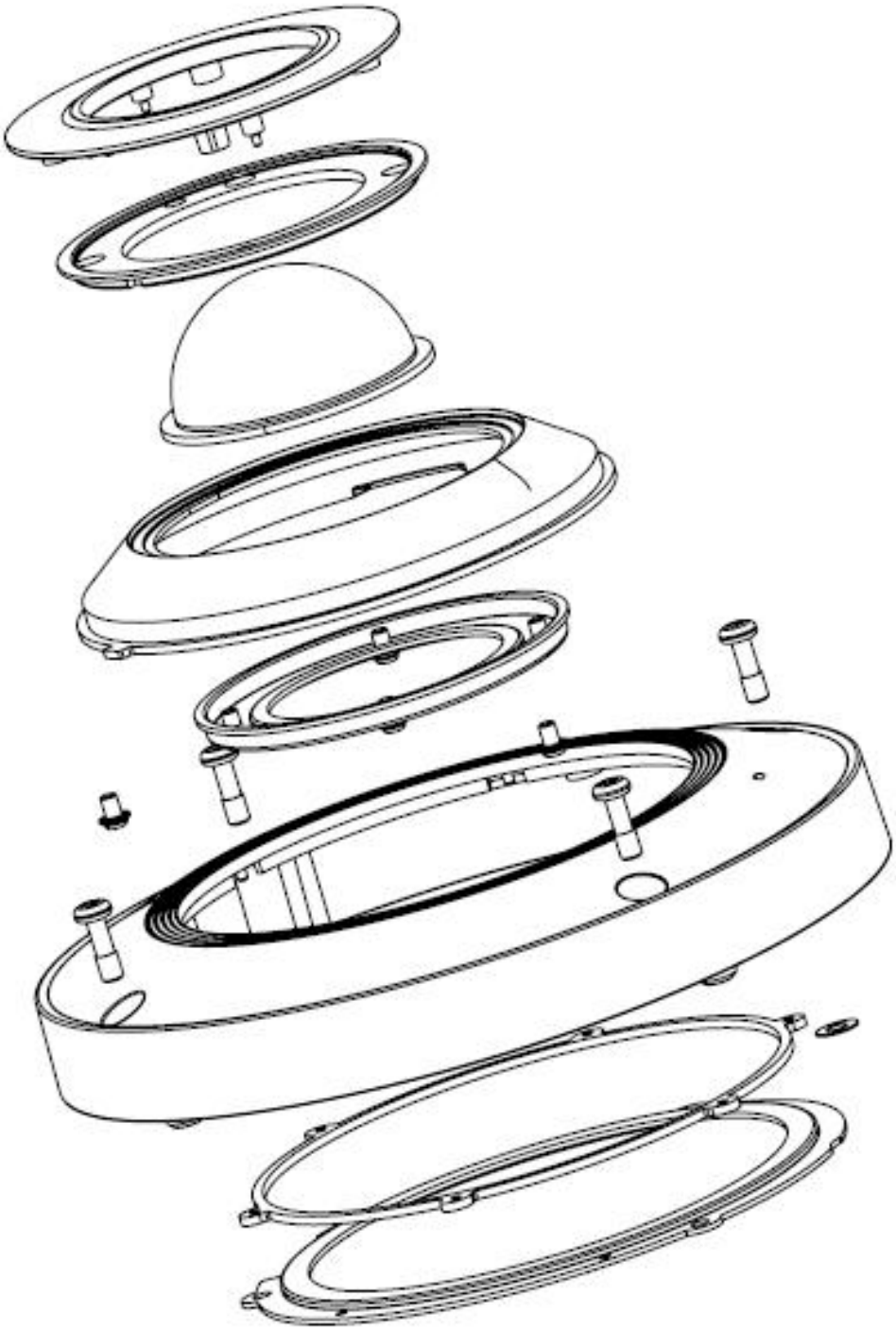

Attachment 2 – Parts List

No	Part Number	Part Name	ea	Material Type
1	AM07-014448A	ASSY,CASE-TOP-XNF-9010RV_WISENET	1	
1-(1)	FC29-013189A	CASE-DOME_XNF-9010RV	1	ALDC
1-(2)	HP07-001566A	GASKET-DOME_XNF-9010RV	1	SILICON RUBBER
1-(3)	FC15-007583B	COVER-DOME_FISHEYE_HC;PC,COATING	1	PC
1-(4)	FC15-005078A	COVER-GLASS_IR_PNF-9010RVM;COVER	1	PC
1-(5)	FC09-011730A	BRACKET-DOME_XNF-9010RV	1	SECC
1-(6)	FC18-004000A	SCREW-BUILT-IN_TORX20;0.7,15,NO,4	4	SUS
1-(7)	Z6001055901A	SCREW-MACHINE;6001-001785,PWH,+,M3,L4,Z	7	SWRCH18A
1-(8)	FC29-013164A	CASE-TOP_XNF-9010RV_WISENET	1	ALDC
1-(9)	FC36-001015	SHEET-GORE-ACOUSTIC-GAW3250408P	1	
1-(10)	HP07-001567A	GASKET-CASE_TOP_XNF-9010RV	1	SILICON RUBBER
1-(11)	FC09-011731A	BRACKET-CASE_TOP_XNF-9010RV	1	SECC
2	AM07-013218B	ASSY-LENS-TOTAL_CL1-ABF	1	
3	FC15-007736A	COVER-LENS_XNF-9010RV;-	1	PC
4	FC09-011728A	BRACKET-LENS_XNF-9010RV	1	ALDC
5	AM08-006603A	ASSY-AF_MODULE_XNF-9010RV	1	
6	Z6001055101A	SCREW-MACHINE;6001-001707,BH,+,M2,L4,ZP	6	SWCH18A
7	AM06-009541A	ASSY,PCB-XNF-9010RV,SENSOR	1	
8	FC28-003056A	PAD-THERMAL-10X10XT2,K=7W/M-K	1	SILICONE
9	FC29-013190A	HOLDER-SENSOR_XNF-9010RV	1	ALDC
10	Z6001053501A	SCREW-MACHINE;6001-001476,BH,+,M3,L6,Ni	3	SWCH18A
11	FC28-003187A	REFLECTOR-IR_XNF-9010RV;-	1	PC
12	AM06-009537A	ASSY,PCB-XNF-9010RV,IR	1	
13	Z9642306007	MACHINE SCREW(M3xL6,Zn-B,냄비머리)	3	SWCH16A
14	FC18-005707A	WASHER,WAVE-XNF-9010RV;-,59	1	SUS
15	FC39-006951A	FRAME-MAIN_XNF-9013RV;ADC12	1	
16	AM06-010723A	ASSY,PCB-XNF-9013RV,SD	1	
17	FC28-003056A	PAD-THERMAL-10X10XT2,K=7W/M-K	1	
18	FC28-003053A	PAD-THERMAL-45X15XT2,K=7W/M-K	1	
19	AM06-010718A	ASSY,PCB-XNF-9013RV,MAIN	1	
20	AM06-009943A	ASSY,PCB-KL720 MODULE	1	
21	FC28-003541A	PAD-THERMAL_54X30XT2;K=7W/M-K	1	
22	FC28-002822A	PAD-THERMAL-30X15XT2,K=7W/M-K	1	
23	FC28-003406A	PAD-THERMAL-45X22XT2;K=7W/M-K	1	
24	HP07-001568A	GASKET-BOTTOM_XNF-9010RV	1	
25	FC29-015051A	CASE-BOTTOM_XNF-9013RV;ADC12	1	
26	FC15-007735A	COVER-CABLE_XNF-9010RV;-	1	
27	FC18-001116A	SCREW-MACHINE;PH,T20,M4,L6,SUS,FP	1	
28	MC06-001082A	BUSHING-CABLE FLEXIBLE;SILICON,GRAY	2	
29	FC39-006226B	MOUNT-PLATE_XNF-9010RV;	1	

Attachment 2 – Parts List

Component - Plastics E41179

MITSUBISHI ENGINEERING-PLASTICS CORP

ENVIRONMENT & QUALITY ASSURANCE DEPT, DIV 1, SHIODOME SUMITOMO-BLDG 25TH FL, 1-9-2 HIGASHI-SHINBASHI, MINATO-KU TOKYO 105-0021 JP

S-2000V+(f1), S-2001V+(f1), S-2003V+(f1)

Polycarbonate (PC), unreinforced, furnished as pellets

Color	Min Thk (mm)	Flame Class	HWI	HAI	RTI Elec	RTI Imp	RTI Str
ALL	0.38	V-2	-	-	80	80	80
	1.5	V-2	3	0	125	115	125
	3.0	V-2	3	0	125	115	125

Comparative Tracking Index (CTI): 2
Dielectric Strength (kV/mm): 20
High-Voltage Arc Tracking Rate (HVTR): 0
Dimensional Stability (%): 0
Inclined Plane Tracking (IPT): -
Volume Resistivity (10^x ohm-cm): 7
High Volt, Low Current Arc Resis (D495): 5

(f1) - Suitable for outdoor use with respect to exposure to Ultraviolet Light, Water Exposure and Immersion in accordance with UL 746C.

+ - Suffix optional, exceptions: The following cannot be used as optional suffixes: "T" for grade 2030, "A" for 1501, 1502, 1511, 1521 & 2502, "N" for NXG5050, NXG5030, NXG5501, & CGF-(u)(u),"S1" for F20-54.

ANSI/UL 94 small-scale test data does not pertain to building materials, furnishings and related contents. ANSI/UL 94 small-scale test data is intended solely for determining the flammability of plastic materials used in the components and parts of end-product devices and appliances, where the acceptability of the combination is determined by UL.

Report Date: 1992-10-01
Last Revised: 2004-03-23

Underwriters Laboratories Inc®

IEC and ISO Test Methods

Test Name	Test Method	Units	Thickness Tested (mm)	Value
Flammability	IEC 60695-11-10	Class (color)	0.38	V-2 (ALL)
			1.5	V-2 (ALL)
			3.0	V-2 (ALL)
Glow-Wire Flammability (GWFI)	IEC 60695-2-12	C	-	-
Glow-Wire Ignition (GWIT)	IEC 60695-2-13	C	-	-
IEC Comparative Tracking Index	IEC 60112	Volts (Max)	-	-
IEC Ball Pressure	IEC 60695-10-2	C	-	-
ISO Heat Deflection (1.80 MPa)	ISO 75-2	C	-	-
ISO Tensile Strength	ISO 527-2	MPa	-	-
ISO Flexural Strength	ISO 178	MPa	-	-
ISO Tensile Impact	ISO 8256	kJ/m^2	-	-
ISO Izod Impact	ISO 180	kJ/m^2	-	-
ISO Charpy Impact	ISO 179-2	kJ/m^2	-	-

Underwriters Laboratories Inc®

143(f1), 143R(f1)

Polycarbonate (PC) "Lexan", furnished as pellets

Color	Min Thk (mm)	Flame Class	HWI	HAI	RTI Elec	RTI Imp	RTI Str
ALL	0.75	HB	-	-	120	120	120
	1.5	HB	4	2	130	125	125
	3.0	HB	4	1	130	130	130

Comparative Tracking Index (CTI): 2
Dielectric Strength (kV/mm): -
High-Voltage Arc Tracking Rate (HVTR): 2
Dimensional Stability (%): 0
Inclined Plane Tracking (IPT): -
Volume Resistivity (10^x ohm-cm): -
High Volt, Low Current Arc Resis (D495): -

(f1) - Suitable for outdoor use with respect to exposure to Ultraviolet Light, Water Exposure and Immersion in accordance with UL 746C.

NOTE - Material designations may be followed by a color nomenclature consisting of either an alpha/numeric or a numeric/alpha combination.

ANSI/UL 94 small-scale test data does not pertain to building materials, furnishings and related contents. ANSI/UL 94 small-scale test data is intended solely for determining the flammability of plastic materials used in the components and parts of end-product devices and appliances, where the acceptability of the combination is determined by UL.

Report Date: 1995-11-06
Last Revised: 2011-02-08

© 2017 UL LLC

IEC and ISO Test Methods

Test Name	Test Method	Units	Thk (mm)	Value
Flammability	IEC 60695-11-10	Class (color)	0.75	HB75 (ALL)
			1.5	HB75 (ALL)
			3.0	HB40 (ALL)
Glow-Wire Flammability (GWFI)	IEC 60695-2-12	°C	-	-
Glow-Wire Ignition (GWIT)	IEC 60695-2-13	°C	-	-
IEC Comparative Tracking Index	IEC 60112	Volts (Max)	-	-
IEC Ball Pressure	IEC 60695-10-2	°C	-	-
ISO Heat Deflection (1.80 MPa)	ISO 75-2	°C	-	-
ISO Tensile Strength	ISO 527-2	MPa	-	-
ISO Flexural Strength	ISO 178	MPa	-	-
ISO Tensile Impact	ISO 8256	kJ/m^2	-	-
ISO Izod Impact	ISO 180	kJ/m^2	-	-
ISO Charpy Impact	ISO 179-2	kJ/m^2	-	-

Attachment 2 – Parts List

LOTTE ADVANCED MATERIALS

UL 인증 | 롯데첨단소재

INFINO	Grade	SC-1220UR

iq.ul.com

Component - Plastics [guide info] E115797

Lotte Advanced Materials Co Ltd
56 Gosan-ro, Uiwang-si Gyeonggi-do 437-711 KR

SC-122(+)
Polycarbonate (PC), "INFINO", furnished as pellets

Color	Min Thk (mm)	Flame Class	HWI	HAI	RTI Elec	RTI Imp	RTI Str
ALL	0.75	V-2	-	-	80	80	80
	1.5	V-2	-	-	80	80	80
	2.5	V-2	-	-	80	80	80
	3.0	V-2	-	-	80	80	80
NC	3.2	V-2	-	-	80	80	80

Comparative Tracking Index (CTI): -
Inclined Plane Tracking (IPT): -
Dielectric Strength (kV/mm): -
Volume Resistivity (10^x ohm-cm): -
High-Voltage Arc Tracking Rate (HVTR): -
High Volt, Low Current Arc Resis (D495): -
Dimensional Stability (%): -

(+) - May be replaced by one, two, or three numbers and/or letter(s)

ANSI/UL 94 small-scale test data does not pertain to building materials, furnishings and related contents. ANSI/UL 94 small-scale test data is intended solely for determining the flammability of plastic materials used in the components and parts of end-product devices and appliances, where the acceptability of the combination is determined by UL.

Report Date: 1998-08-24
Last Revised: 2016-04-18

© 2016 UL LLC

IEC and ISO Test Methods

Test Name	Test Method	Units	Thk (mm)	Value
Flammability	IEC 60695-11-10	Class (color)	0.75	V-2 (ALL)
			1.5	V-2 (ALL)
			2.5	V-2 (ALL)
			3.0	V-2 (ALL)
			3.2	V-2 (NC)
Glow-Wire Flammability (GWFI)	IEC 60695-2-12	C	1.5	900
			2.5	925
			3.2	925
Glow-Wire Ignition (GWIT)	IEC 60695-2-13	C	1.5	800
			2.5	825
			3.2	850
IEC Comparative Tracking Index	IEC 60112	Volts (Max)	-	-
IEC Ball Pressure	IEC 60695-10-2	C	-	-
ISO Heat Deflection (1.80 MPa)	ISO 75-2	C	-	-
ISO Tensile Strength	ISO 527-2	MPa	-	-
ISO Flexural Strength	ISO 178	MPa	-	-
ISO Tensile Impact	ISO 8256	kJ/m^2	-	-
ISO Izod Impact	ISO 180	kJ/m^2	-	-
ISO Charpy Impact	ISO 179-2	kJ/m^2	-	-

COPYRIGHT © 2016 by LOTTE ADVANCED MATERIALS CO., LTD. ALL RIGHTS RESERVED.

Attachment 3 – Photographs

Test Unit

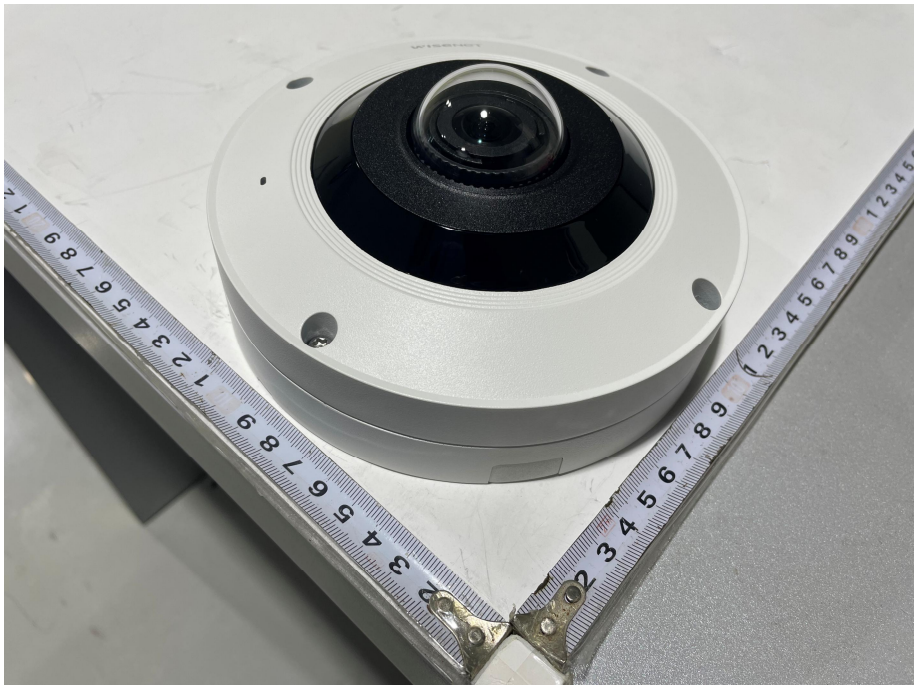

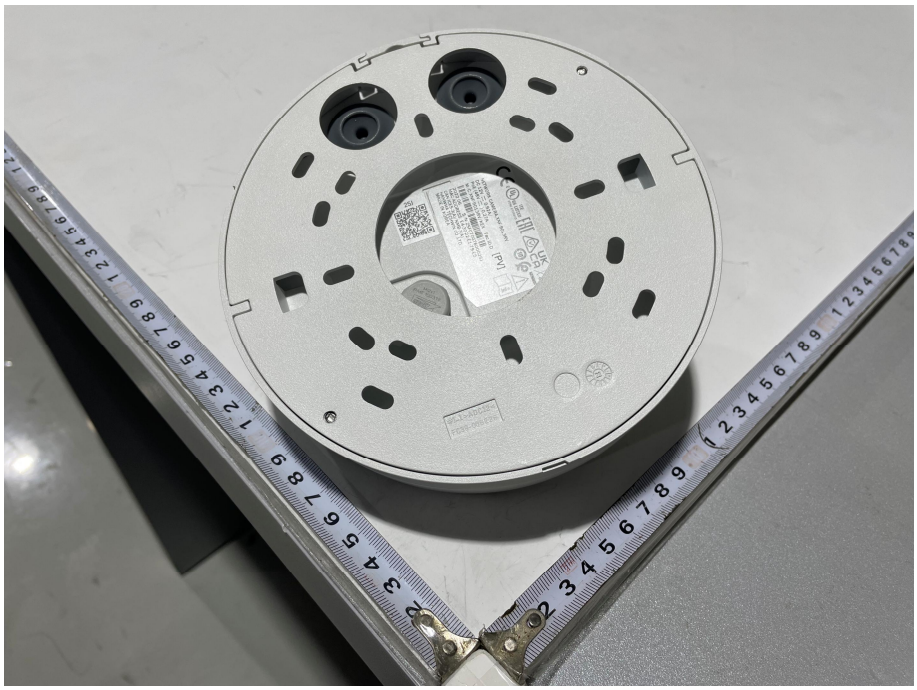

Attachment 3 – Photographs

Hose down test

Attachment 3 – Photographs

Test Result

Attachment 3 – Photographs

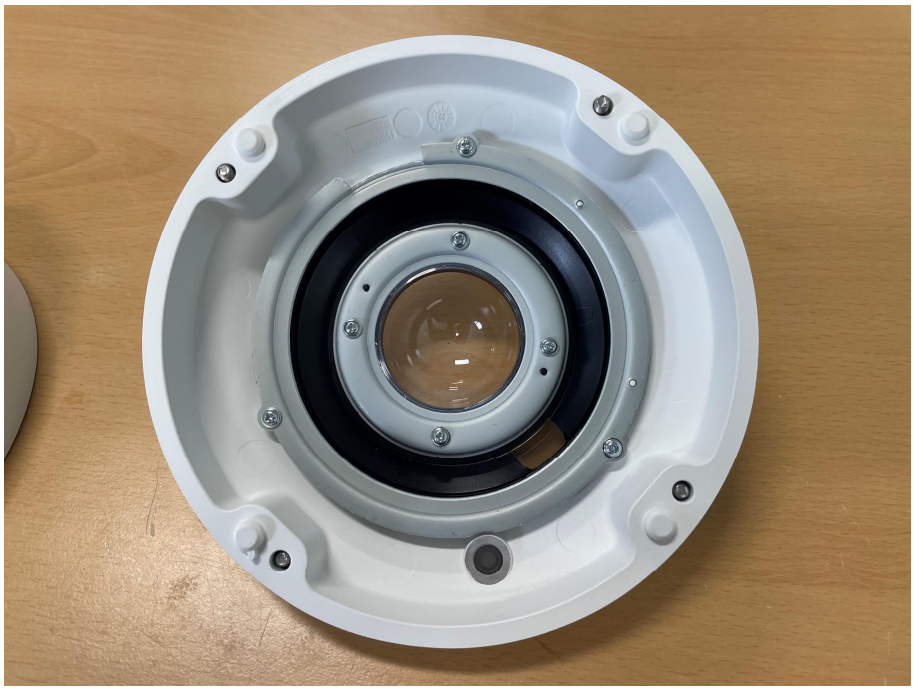

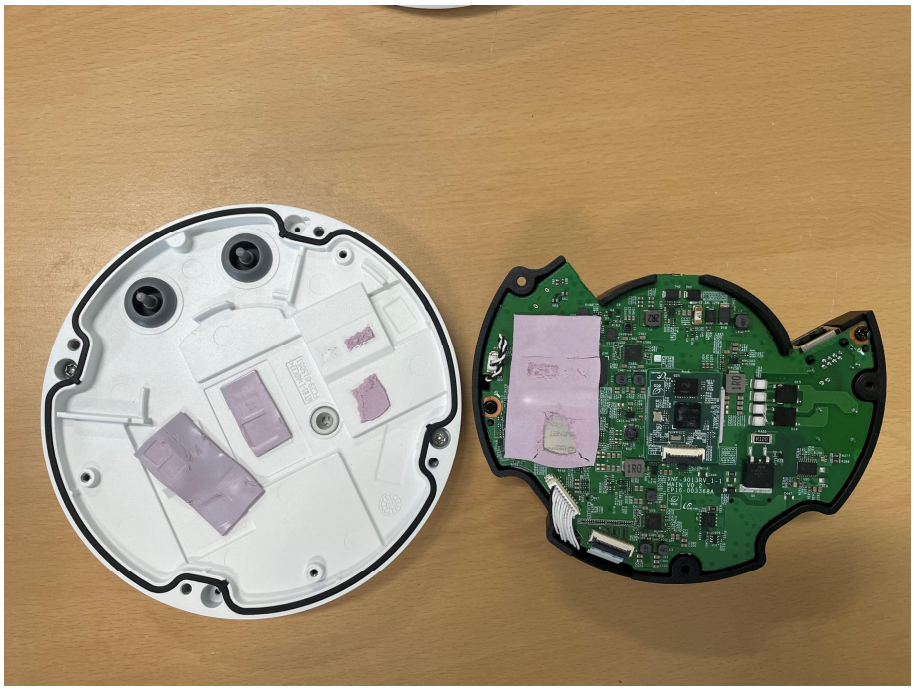

Attachment 3 – Photographs

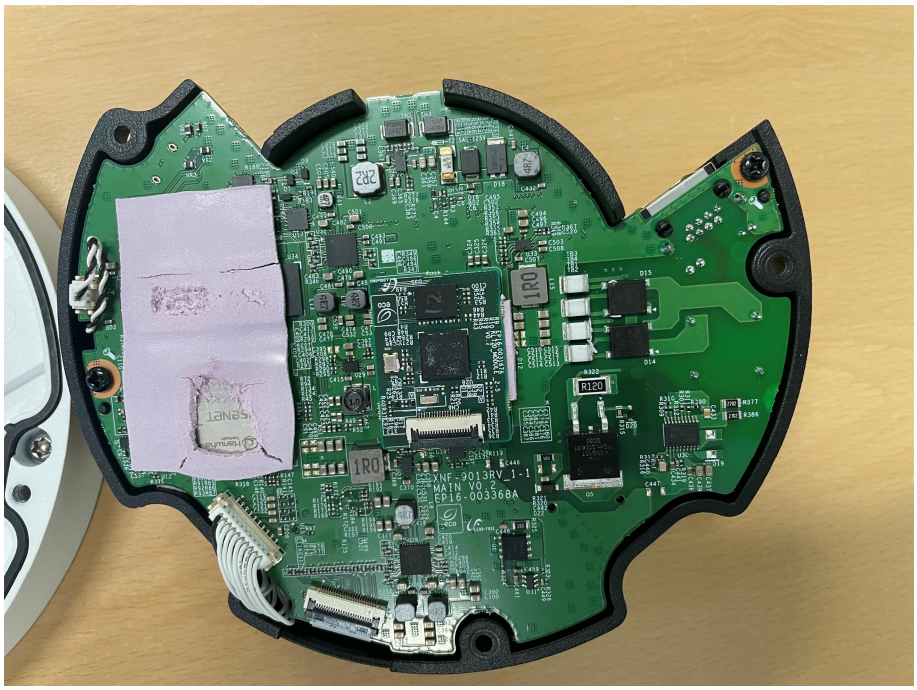

-END-