

Network Fisheye

XNF-9013RV

12MP AI IR Fisheye Camera

Key Features

- Wisenet Fisheye cameras are a perfect solution for situational awareness for large areas where you need complete coverage with no blindspots. Easily dewarp the image on-the-fly while recording the full fisheye image. No need to worry about a PTZ positioned in the wrong area!
- CloudConnector Compatible – Connects easily with HealthPro, OnCloud, SightMind
- AI Engine for forensic search and analytic event false alert reduction, Classified object type: Person/Face/Vehicle/License plate - Support Detection Shot
- 3008 x 3008 resolution, 30fps
- 1.08mm Stereographic type lens, enhanced resolution for the peripheral regions (187°X187°) W/ simple focus
- Built-in IR for up coverage up to 42' with Wise IR II multi-zone IR management
- Triple Codec: H.265, H.264 and MJPEG multiple streaming
- On board dewarping, Digital PTZ
- Fisheye, Single panorama, Double panorama, Quad view
- Multiple virtual channels for easy dewarping views
- WiseStream III compression technology
- extreme WDR by scene Analysis and Local contrast enhancement
- Analytics events based on AI engine: Object detection (Person/Face/Vehicle/License plate), IVA (Virtual line/Area, Enter/Exit, Loitering, direction, intrusion)
- Analytics events : Defocus detection, Motion detection, Tampering, Fog detection, Audio detection, Sound classification.
- Business Intelligence Based on AI engine : People counting, Queue management, Heatmap
- Dual SD cards
- Adjustable IR distance with WisePower : PoE+mode-13m, PoE mode-8m
- Supports 12v DC
- IP66/IK10/NEMA4X
- Direct connect female shielded RJ45 connector for easy installation without pigtail
- USB & analog video output for easy installation
- Hard-coated dome cover for durability
- TPM 2.0 (FIPS 140-2 certified), Secure OS/boot/storage, Verified FW forgery

Design and specifications are subject to change without notice. The latest product information / specification can be found at HanwhaVision.com
Hanwha Vision is formerly known as Hanwha Techwin.

© Hanwha Vision CO., LTD. All rights reserved.

XNF-9013RV

12MP AI IR Fisheye Camera



Specifications

Video

Imaging Device	Size	1/2.3"
	Type	CMOS
Resolution		3584x2688, 3584x1792, 3584x896, 3008x3008, 1920x960, 1920x480, 1792x1344, 1792x896, 1504x1504, 1080x1080, 1024x768, 960x960, 800x600, 768x768, 720x720, 704x576, 640x640, 640x480, 640x320, 640x160, 480x480
Max. Framerate	H.265/H.264	30fps/25fps(60Hz/50Hz)
	MJPEG	30fps(@9MP Max. 5fps)
Min. Illumination (Lux)	Color(1/30sec, 30IRE)	0.39
	BW(1/30sec, 30IRE)	0.039
Video Out		CVBS: 1.0 Vp-p / 75Ω composite for installation, USB: Micro USB Type B. Preview and installation ONLY. Requires WiFi dongle.

Lens

Focal Length (mm)		1.08
Max Aperture Ratio (F number)	Wide	2.2
Angular Field of View	Horizontal	187°
	Vertical	187°
	Diagonal	187°
Min. Object Distance		0.5m(1.64ft)
Focus Control		Simple focus

Pan / Tilt / Rotate

Pan / Tilt / Rotate Range	Rotate	Lens rotation

Operational

Day & Night		Auto(ICR)
Backlight Compensation		BLC, HLC, WDR, SSDR
Wide Dynamic Range (dB)		120
Digital Noise Reduction		WiseNR II (Based on AI engine), SSNR V
Motion Detection	Quantity	8ea
	Shape	8point Polygonal zones

Design and specifications are subject to change without notice. The latest product information / specification can be found at HanwhaVision.com
Hanwha Vision is formerly known as Hanwha Techwin.

© Hanwha Vision CO., LTD. All rights reserved.

Operational

Privacy Masking	Quantity	32ea
	Shape	4point Quadrangle zones
	Color / Option	Gray, Green, Red, Blue, Black, White, Mosaic
Gain Control		Off, Max gain, Manual
White Balance		ATW, NarrowATW, AWC, Manual, Indoor, Outdoor
Electronic Shutter	Mode	Minimum, Maximum, Anti flicker, Prefer shutter control(Based on AI engine)
	Speed Range	1/5~1/12,000sec
Video Rotation		Flip, Mirror
Alarm Interface	In/Out	2 configurable I/O ports
Alarm Triggers		Analytics, Network disconnect, Alarm input, App event, Time schedule, MQTT subscription
Alarm Events When Alarm Trigger Occurred		File upload(image): e-mail/FTP/SFTP, File upload(video clip): FTP/SFTP, Notification: e-mail, Recording: SD/SDHC/SDXC or NAS recording at event triggers,Alarm output, Handover: PTZ preset,send message by HTTP/HTTPS/TCP,Audio clip playback, MQTT: publication
Audio In		Selectable(mic in/line in), Built-in mic
Audio Out		Line out
Light Type		IR LED
Light Viewable Length	IR	WiseIR 8m(26.25ft)(PoE), 13m(42.65ft)(PoE+)
IR Wavelength		850nm

Analytics

Classified Object Type		Person, Face, Vehicle, License plate
Attributes	Vehicle	Type(car, bus, truck, motorcycle, bicycle)
Thumbnail		DetectionShot
Analytics Events	Based on AI Engine	Object detection, Virtual line(Crossing/Direction), Virtual area(Loitering/Intrusion/Enter/Exit), Motion detection
	Normal	Defocus detection, Tampering, Audio detection, Sound classification, Virtual area(Appear/Disappear)
Business Intelligence	Based on AI Engine	People counting, Queue management, Heatmap, Vehicle counting

Network

Ethernet	Metal shielded RJ-45(10/100BASE-T)
Video Compression	H.265: Main, H.264: Main/Baseline/High,MJPEG
Audio Compression	G.711 u-law /G.726 selectable,G.726(ADPCM) 8kHz,G.711 8kHz, G.726: 16kbps,24kbps,32kbps,40kbps, AAC-LC: 48kbps at 16kHz
Smart Codec	Manual, WiseStreamIII
Bitrate Control	H.265/H.264: CBR or VBR, MJPEG: VBR

Design and specifications are subject to change without notice. The latest product information / specification can be found at HanwhaVision.com
Hanwha Vision is formerly known as Hanwha Techwin.

© Hanwha Vision CO., LTD. All rights reserved.

Network

Streaming	Unicast	Up to 20 users
	Multicast	Support
	Multiple Streaming	Up to 10 profiles
Protocol		IPv4, IPv6, TCP/IP, UDP/IP, RTP(UDP), RTP(TCP), RTCP, RTSP, NTP, HTTP, HTTPS, SSL/TLS, DHCP, FTP, SFTP, SMTP, ICMP, IGMPv1/v2/v3, SNMPv1/v2c/v3(MIB-2), ARP, DNS, DDNS, QoS, UPnP, Bonjour, LLDP, CDP, SRTP(TCP, UDP Unicast), MQTT
Application Programming Interface	ONVIF	S, G, T, M
	Others	SUNAPI(HTTP API), Hanwha Vision Open Platform
Direct Cloud Connection		Support

Security

OS / Firmware Protect	Encrypted firmware, Secure boot, Signed firmware
User authentication	Digest authentication, Prevent brute-force attack
Network authentication	IEEE 802.1X(EAP-TLS, EAP-LEAP, EAP-PEAP, MSCHAPv2)
Secure Communication	HTTPS, WSS(WebSocket Secure), SRTP
Access Control	IP-based access control
Data Protect	Encryption credentials, Encrypt compress for live recording file export
Audit	Access / System / Event Log management
Device ID	Device certificate(Hanwha Vision Root CA)
Secure Storage	TPM(Trusted platform module), HTPM(Hanwha Trusted Platform Module), SDcard partition encrypt(AES-256)
Security Certificate	TPM 2.0 with FIPS 140-2 level2

General

Memory	RAM	4GB
	Flash	512MB
Edge Storage	Micro SD/SDHC/SDXC	Max. 512GB x 2slot(Total 1TB)

Environmental & Electrical

Operating Condition	Temperature	-40°C~+60°C(-40°F~+140°F)
	Humidity	0~95% RH(non-condensing)
Storage Condition	Temperature	-50°C~+60°C(-58°F~+140°F)
	Humidity	0~90% RH(non-condensing)
Input Voltage		PoE(IEEE802.3af, Class3), PoE+(IEEE802.3at, Class4), 12VDC
Power Consumption	PoE	PoE mode: Max 12.95W,typical 9.4W, PoE+ mode: Max 23.0W,typical 9.4W,
	12VDC	PoE mode: Max 12.9W,typical 9.0W, PoE+ mode: Max 22.0W,typical 9.0W

Mechanical

Color	White

Design and specifications are subject to change without notice. The latest product information / specification can be found at HanwhaVision.com
Hanwha Vision is formerly known as Hanwha Techwin.

© Hanwha Vision CO., LTD. All rights reserved.

Mechanical

Material	Aluminum
RAL Code	RAL9003
Product Dimensions	ø160x72mm(ø6.30x2.83")
Product Weight	1170g(2.58 lb)
Compatible Gang Box	Single, Double, 4" Octagon, Square

Certifications & Standards

EMC	FCC 47 CFR 15 Subpart B Class A, ICES-3(A)/NMB-3(A), CE/UKCA - EN55032 Class A, EN 50130-4, EN 61000-3-2, EN 61000-3-3, VCCI CISPR 32 Class A, RCM AS-NZS CISPR 32 Class A, KS C 9832 Class A, KS C 9835
Safety	UL 62368-1, CAN/CSA C22.2 NO. 62368-1, IEC 62471
Environment	IEC/EN 63000, IEC 60529 IP66, IEC 62262 IK10, NEMA 250 type 4X

DORI (EN62676-4 standard)

Detect (25PPM/ 8PPF)	Wide	34.9m(114.49ft)
Observe (63PPM/ 19PPF)	Wide	13.9m(45.60ft)
Recognize (125PPM/ 38PPF)	Wide	7.0m(22.96ft)
Identify (250PPM/ 76PPF)	Wide	3.5m(11.48ft)

Design and specifications are subject to change without notice. The latest product information / specification can be found at HanwhaVision.com
Hanwha Vision is formerly known as Hanwha Techwin.

© Hanwha Vision CO., LTD. All rights reserved.

XNF-9013RV

12MP AI IR Fisheye Camera



CAD

Unit: mm [inch]

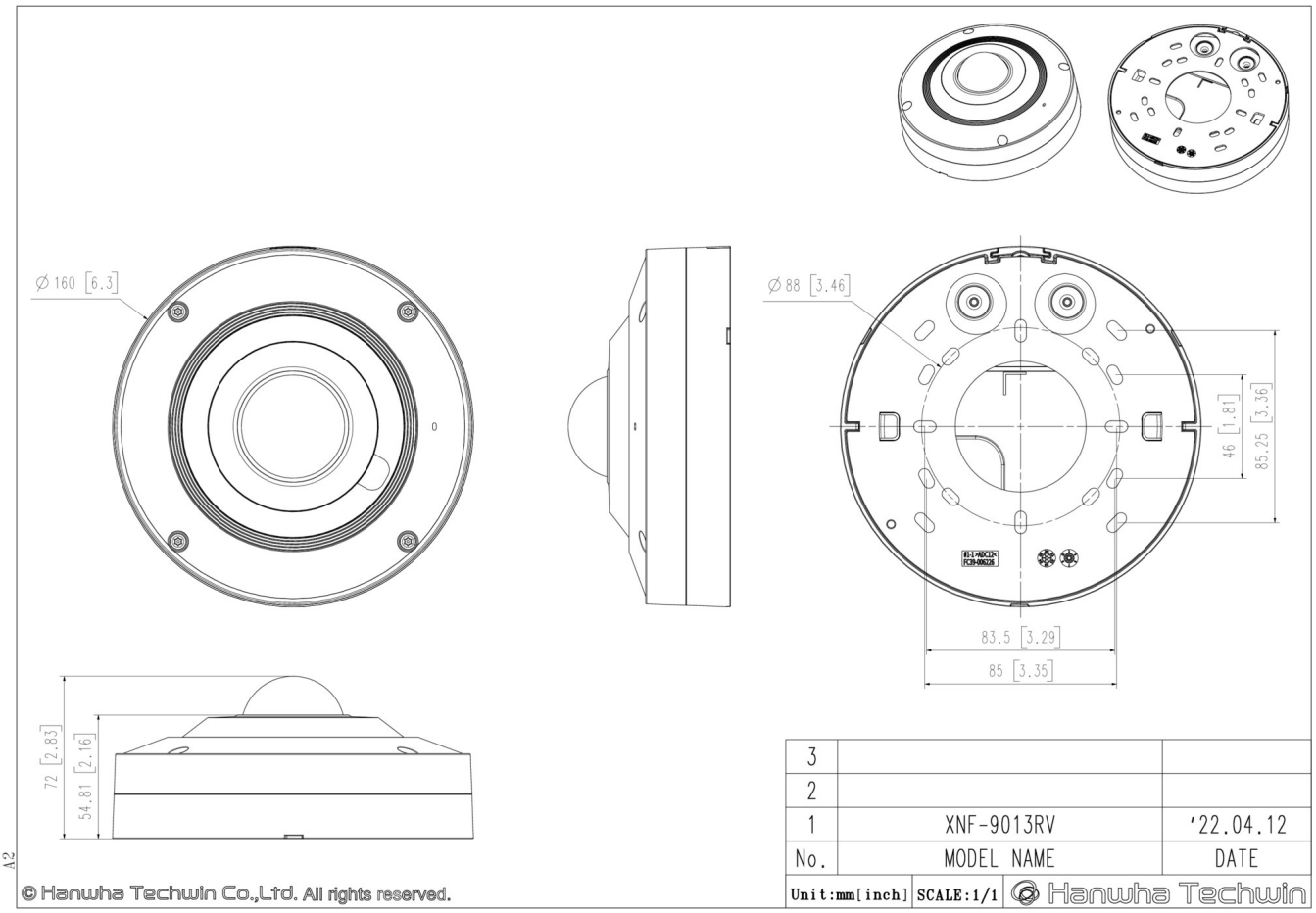

Design and specifications are subject to change without notice. The latest product information / specification can be found at HanwhaVision.com
Hanwha Vision is formerly known as Hanwha Techwin.

© Hanwha Vision CO., LTD. All rights reserved.