Network Fisheye

XNF-A8014RV

6MP AI IR Fisheye Camera

Key Features

- 6MP Image Resolution
- 30fps Max. Framerate
- 17m IR Length
- IP66, IK10 Rated
- 1.76mm fixed stereo graphic type lens
- Digital Rotation
- Dual NPU for AI-based Image Enhancement
- Object detection, Intelligent Video Analytics, Motion detection
- People/Vehicle/Crowd counting, Queue management, Heatmap
- BestShot and color attributes

Design and specifications are subject to change without notice. The latest product information / specification can be found at HanwhaVision.com
Hanwha Vision is formerly known as Hanwha Techwin.

© Hanwha Vision CO., LTD. All rights reserved.

XNF-A8014RV

6MP AI IR Fisheye Camera

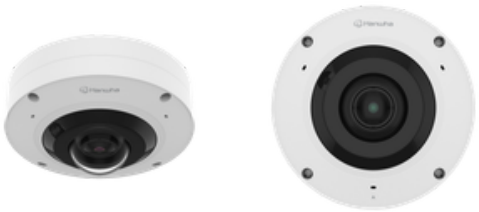

Specifications

Video

Imaging Device	Size	1/1.6"
	Type	CMOS
Resolution		2560x2560, 2560x1920, 2560x1280, 2560x640, 1920x960, 1920x480, 1792x1344, 1600x1600, 1280x1280, 1280x960, 1280x640, 1280x320, 1024x768, 1024x512, 1024x256, 800x800, 800x600, 640x640, 640x480, 640x320, 640x160, 480x480, 320x240, 160x160
Max. Framerate	H.265/H.264	30fps/25fps(60Hz/50Hz)
	MJPEG	5fps
	Others	Max. 20fps in PoE mode
Min. Illumination (Lux)	Color(1/30sec, 30IRE)	0.02
	BW(1/30sec, 30IRE)	0.001

Lens

Focal Length (mm)		1.76
Max Aperture Ratio (F number)	Wide	1.8
	Tele	1.8
Angular Field of View	Horizontal	185°
	Vertical	185°
	Diagonal	185°
Min. Object Distance		0.5m(1.64ft)

Pan / Tilt / Rotate

Pan / Tilt / Rotate Range	Rotate	Digital rotation

Operational

Day & Night	Auto(ICR)
Backlight Compensation	BLC, HLC, WDR, SSDR
Wide Dynamic Range (dB)	120
Digital Noise Reduction	WiseNR II (Based on AI engine), SSNR V
Digital Image Stabilization	Support
Defog	Support

Design and specifications are subject to change without notice. The latest product information / specification can be found at HanwhaVision.com
Hanwha Vision is formerly known as Hanwha Techwin.

© Hanwha Vision CO., LTD. All rights reserved.

Operational

Motion Detection	Quantity	8ea
	Shape	8point Polygonal zones
Privacy Masking	Quantity	32ea
	Shape	8point Polygonal zones
	Color / Option	Gray, Green, Red, Blue, Black, White, Mosaic, Purple, Yellow
	Dynamic Privacy Masking: Color / Option	Gray, Green, Red, Blue, Black, White, Mosaic, Purple, Yellow
Gain Control		Off, Max gain, Manual
White Balance		ATW, NarrowATW, AWC, Manual, Indoor, Outdoor
Electronic Shutter	Mode	Minimum, Maximum, Anti flicker, Prefer shutter control(Based on AI engine)
	Speed Range	2~1/30,000sec
Digital PTZ		Support
Video Rotation		Flip, Mirror
Alarm Interface	In/Out	2 configurable I/O ports
	Others	Support extra alarm I/O via optional I/O box
Alarm Triggers		Analytics, Network disconnect, Alarm input, Time schedule, MQTT subscription, Case tampering, Day/Night, Storage disruption
Alarm Events When Alarm Trigger Occurred		File upload(image): e-mail/FTP/SFTP, File upload(video clip): FTP/SFTP, Notification: e-mail, Recording: SD/SDHC/SDXC or NAS recording at event triggers,Alarm output, Handover: PTZ preset,send message by HTTP/HTTPS/TCP,Audio clip playback, MQTT: publication
Audio In		Selectable(mic in/line in), Built-in 3mics
Audio Out		Line out
Light Type		IR LED
Light Viewable Length	IR	WiseIR up to 17m(55.77ft)
IR Wavelength		850nm

Analytics

Classified Object Type		Person, Face, Vehicle, License plate
Attributes	Person	Upper/Lower clothes color
	Vehicle	Type(car, bus, truck, motorcycle, bicycle), Color
Thumbnail		BestShot
Analytics Events	Based on AI Engine	Object detection, Virtual line(Crossing/Direction), Motion detection, Virtual area(Loitering/Intrusion/Enter/Exit/Appear/Disappear)
	Normal	Defocus detection, Tampering, Audio detection, Shock detection
Business Intelligence	Based on AI Engine	People counting, Queue management, Heatmap, Vehicle counting, Crowd counting

Network

Ethernet	Metal shielded RJ-45(10/100BASE-T)

Design and specifications are subject to change without notice. The latest product information / specification can be found at HanwhaVision.com
Hanwha Vision is formerly known as Hanwha Techwin.

© Hanwha Vision CO., LTD. All rights reserved.

Network

Video Compression		H.265: Main, H.264: Main/Baseline/High,MJPEG
Audio Compression		Opus 8/16kHz, G.711(PCM): 8kHz(64kbps), G.726(ADPCM): 8kHz(16/24/32/40kbps), OPUS: 16kHz(64kbps), AAC-LC: 16/32/44.1/48kHz(48kbps), OPUS: 48kHz(64kbps)
Smart Codec		WiseStream(Based on AI engine)
Bitrate Control		H.265/H.264: CBR or VBR, MJPEG: VBR
Streaming	Unicast	Up to 20 users
	Multicast	Support
	Multiple Streaming	Up to 5 profiles
Protocol		IPv4, IPv6, TCP/IP, UDP/IP, RTP(UDP), RTP(TCP), RTCP, RTSP, NTP, HTTP, HTTPS, SSL/TLS, DHCP, FTP, SFTP, ICMP, IGMPv2, SNMPv1/v2c/v3(MIB-2), ARP, DNS, DDNS, QoS, UPnP, Bonjour, LLDP, CDP, SRTP(TCP, UDP Unicast), MQTT, SMTP(StartTLS), Syslog
Application Programming Interface	ONVIF	S, G, T, M
	Others	SUNAPI(HTTP API), Hanwha Vision Open Platform
Direct Cloud Connection		Support

Security

OS / Firmware Protect	Encrypted firmware, Secure boot, Signed firmware
User authentication	Digest authentication, Prevent brute-force attack
Network authentication	IEEE 802.1X(EAP-TLS, EAP-LEAP, EAP-PEAP, MSCHAPv2)
Secure Communication	HTTPS, WSS(WebSocket Secure), SRTP, 802.1AE(MACsec)
Access Control	IP-based access control, MAC-based access control, Auto logout
Data Protect	Encryption credentials, Encrypt compress for live recording file export
Audit	Access / System / Event Log management
Device ID	Device certificate(Hanwha Vision Root CA)
Secure Storage	SDcard partition encrypt(AES-256), Secure element
Supply Chain Security	SBOM
Security Certificate	Secure element(FIPS 140-3 level3, CC EAL6+), Consumer IoT Security Standard (ETSI EN 303 645)

General

SoC	Type	Wisenet 9
	Dual NPU	Support
Memory	RAM	4GB
	Flash	8GB eMMC
Edge Storage	Micro SD/SDHC/SDXC	Max. 1TB x 1slot

Design and specifications are subject to change without notice. The latest product information / specification can be found at HanwhaVision.com
Hanwha Vision is formerly known as Hanwha Techwin.

© Hanwha Vision CO., LTD. All rights reserved.

General

Edge Storage(OnCloud)	Micro SD/SDHC/SDXC	Max. 1TB x 1slot *Hanwha Vision branded microSD cards have been certified and recommended for OnCloud edge recording.

Environmental & Electrical

Operating Condition	Temperature	-40°C~+55°C(-40°F~+131°F)
	Humidity	0~100% RH(condensing)
	Others	In PoE+ mode, IR illuminator will turn off if the temperature is higher than 50°C
Storage Condition	Temperature	-50°C~+60°C(-58°F~+140°F)
	Humidity	0~95% RH(non-condensing)
Input Voltage		PoE(IEEE802.3af, Class3), PoE+(IEEE802.3at, Class4), 12VDC
Power Consumption	PoE	Max. 19.8W, typical 10.5W
	12VDC	Max 20.0W, typical 10.9W
WisePower		Power mode, Power monitoring
Power Redundance Failover		Support

Mechanical

Color		White
Material		Aluminum, Hard-coated dome
Material Management	Declaration	RoHS(EU RoHS directive 2011/65/EU and IEC/EN 63000:2018)
RAL Code		RAL9003
Product Dimensions		Ø160x75mm(6.23x2.95")
Product Weight		1020g(2.25lb)
Compatible Gang Box		Single, Double, 4" Octagon, Square

Certifications & Standards

EMC	EN 50121-4, FCC 47 CFR 15 Subpart B Class A, ICES-3(A)/NMB-3(A), CE/UKCA - EN55032 Class A, EN 50130-4, EN 61000-3-2, EN 61000-3-3, VCCI CISPR 32 Class A, RCM AS-NZS CISPR 32 Class A, KS C 9832 Class A, KS C 9835, EN 50121-3-2
Safety	UL 62368-1, CAN/CSA C22.2 NO. 62368-1, IEC 62471
Environment	IEC/EN 63000, IEC 60529 IP66, IEC 62262 IK10, NEMA TS 2-2013 (2.2.7, 2.2.8, 2.2.9), NEMA 250 type 4X, EN 50155, IEC 62236-4, EN 50121-4, EN 50498, IEC/EN 61373, EN 45545, IEC 62236-3-2, IEC 60068-2-1, IEC 60068-2-2, IEC 60068-2-6, IEC 60068-2-14, IEC 60068-2-27, IEC 60068-2-78

DORI (EN62676-4 standard)

Detect (25PPM/ 8PPF)	Wide	31.4m(102.97ft)
Observe (63PPM/ 19PPF)	Wide	12.6m(41.19ft)
Recognize (125PPM/ 38PPF)	Wide	6.3m(20.59ft)
Identify (250PPM/ 76PPF)	Wide	3.1m(10.30ft)

Design and specifications are subject to change without notice. The latest product information / specification can be found at HanwhaVision.com
Hanwha Vision is formerly known as Hanwha Techwin.

© Hanwha Vision CO., LTD. All rights reserved.

XNF-A8014RV

6MP AI IR Fisheye Camera

CAD

Unit: mm [inch]

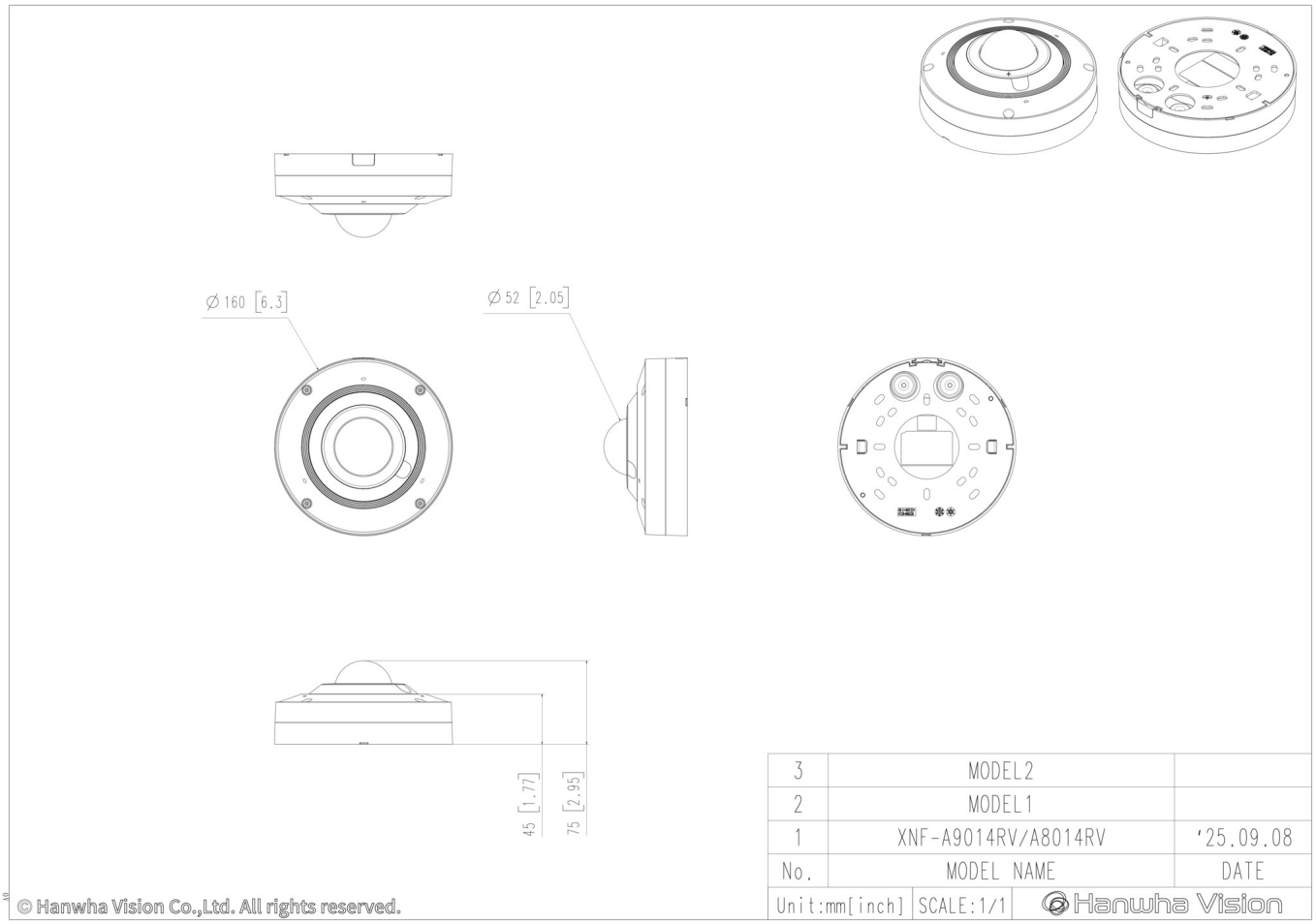

© Hanwha Vision CO., LTD. All rights reserved.

Compatible Devices

SBP-160HMW1

SBP-140CMB

SBP-180CMB

SBP-180CMS

SBP-150CMP

SBP-300CMP

SBP-900CMP

SBP-C15H

SBP-C15NP

SBP-C35H

SBP-C15P

SBP-150CMI

SBP-300CMI

SBP-300CMW1

SBP-900CMW

SBP-300CMTW

SBP-300CMTS

SBP-160WMW1

SBP-250WMW

SBP-400WMW

SBP-115PFA

SBV-180BW

SBV-180WW

SBP-160TMW1

SBP-150PMW

SBD-180PMW

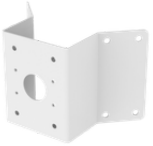

SBP-156KMW

SBP-156LMW1

SBP-150NBW

SBC-161BF

SPP-C7400

SPP-C1200M

SBP-300WMW

SBP-300WMW1

SBP-300BW1

SBP-300PMW2

SBP-300KMW1

SBP-300LMW

SBP-300NBW

Design and specifications are subject to change without notice. The latest product information / specification can be found at HanwhaVision.com
Hanwha Vision is formerly known as Hanwha Techwin.

© Hanwha Vision CO., LTD. All rights reserved.