TEST REPORT

CTK Co., Ltd.
(Ho-dong) 113, Yejik-ro, Cheoin-gu, Yongin-si, Gyeonggi-do, KOREA, REPUBLIC OF
Tel: +82-31-339-9970
Fax: +82-31-624-9501

Report No.:
CTK-2017-00473

1. Applicant

◦ Name.....: Hanwha Techwin Co., Ltd.

◦ Address .....: Hanwha Techwin R&D center, 6 Pangyo-ro 319Beon-gil, Bundang-gu, Seongnam-si, Gyeonggi-do, 13488 KOREA

◦ Date of Receipt .....: 2016-12-29

2. Manufacturer

◦ Name.....: HANWHA TECHWIN (TIANJIN) CO.,LTD.

◦ Address .....: No.11 Weiliu Rd,Micro-Electronic Industrial Park,TEDA,Tianjin,300385,People's Republic of China

3. Test sample / Model.....: NETWORK CAMERA / XNO-8080R* (*N:NT/P:PAL)

4. Date(s) of test .....: 2017-01-05

5. Test Standard (Method) used ....: NEMA 250-2014
Enclosures for Electrical Equipment (1000 Volts Maximum)

6. Results .....: Pass

The results shown in this test report refer only to the sample(s) tested unless otherwise stated.
This report shall not be reproduced except in full without the written approval of CTK

Affirmation	Tested by: WonHyeon. Choi.	(signature)	Technical Manager: YongGon. Kim	(signature)

2017-03-17

CTK Co., Ltd.

Test item description..... :	NETWORK CAMERA
Trade Mark..... :	WISENET
Manufacturer ..... :	No.11 Weiliu Rd,Micro-Electronic Industrial Park,TEDA,Tianjin,300385,People's Republic of China
Model/Type reference..... :	XNO-8080R* (*N:NT/P:PAL)
Ratings..... :	Electrical : AC24V/DC12V/POE Dimension : 91.0 mm by 91.0 mm by 368.6 mm

List of Attachments (including a total number of pages in each attachment):

Attachment 1: 12-15 pages (Construction Diagram including installation method)

Attachment 2: 16-20 pages (Parts List)

Attachment 3: 21-24 pages (photographs)

Summary of testing:

Tests performed (name of test and test clause): **Clause 5.7(Hose Down Test)**	**Testing location:** CTK Co., Ltd. (Ho-Dong) 113, Yejik-ro Cheoin-gu, Yongin-shi Gyeonggi-do KOREA, REPUBLIC OF

Copy of marking plate: The artwork above may be only a draft.

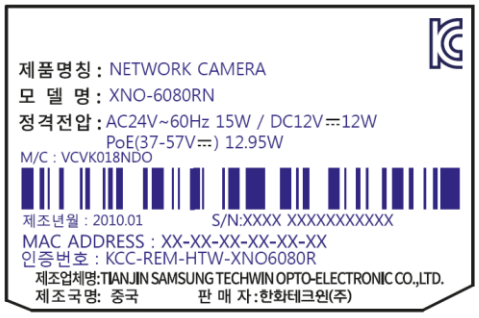

PT03-002454C

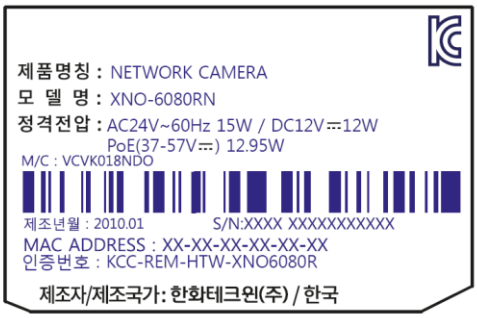

PT03-002454A

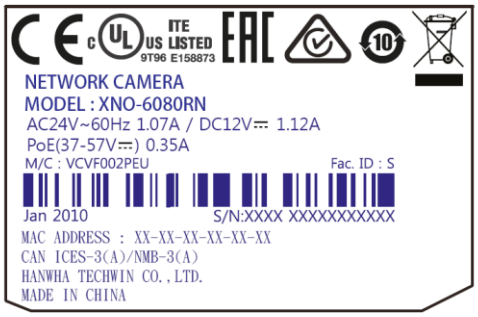

PT03-002454B

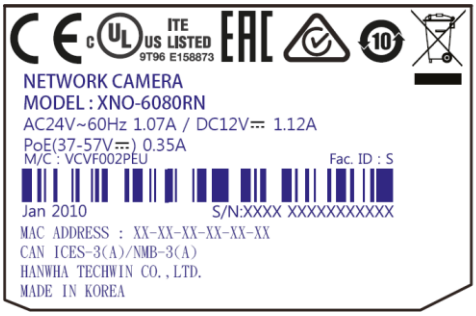

PT03-002454B

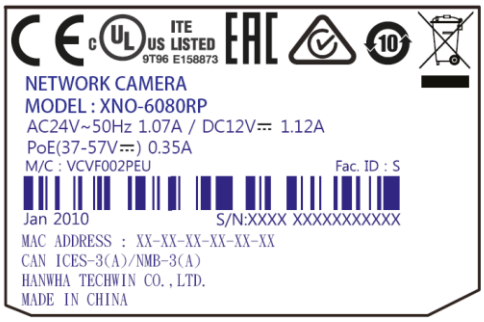

PT03-002454B

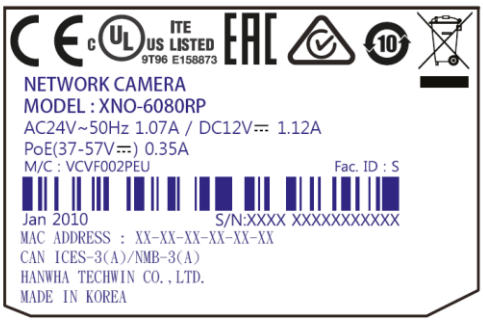

PT03-002454B

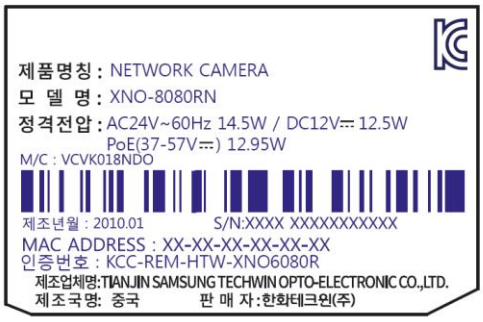

PT03-002454C

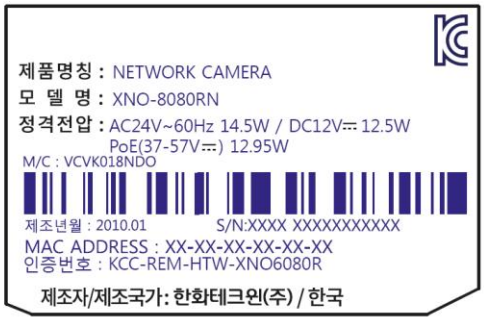

PT03-002454A

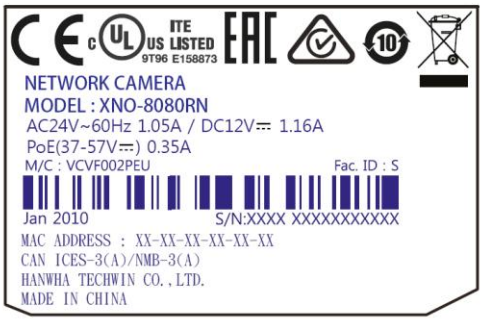

PT03-002454B

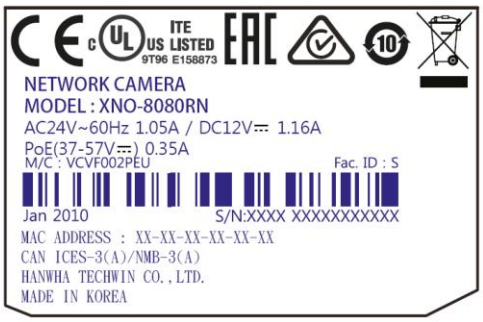

PT03-002454B

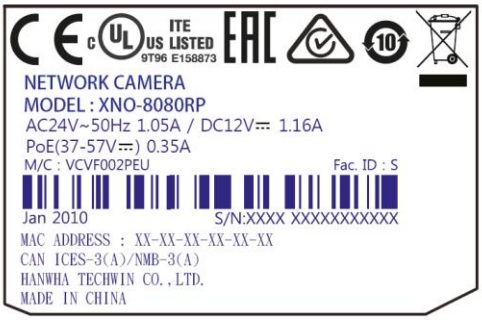

PT03-002454B

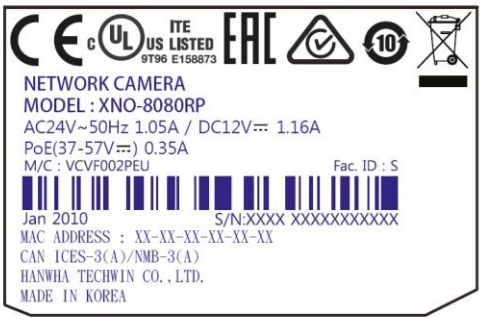

PT03-002454B

CTK Co., Ltd.
(Ho-dong) 113, Yejik-ro, Cheoin-gu, Yongin-si, Gyeonggi-do, KOREA, REPUBLIC OF
Tel: +82-31-339-9970
Fax: +82-31-624-9501

Test item particulars..... :	Network Camera
Classification of installation and use ..... :	Outdoor(Watertight/Corrosion Resistant)
Possible test case verdicts:	
- test case does not apply to the test object..... :	N/A
- test object does meet the requirement ..... :	P (Pass)
- test object does not meet the requirement..... :	F (Fail)
- test case does not evaluated to the test object :	N/E

General remarks:

"(See Enclosure #)" refers to additional information appended to the report.
"(See appended table)" refers to a table appended to the report.

Throughout this report a ☐ comma / ☒ point is used as the decimal separator.

Clause numbers between brackets refer to clauses in NEMA 250-2014

Name and address of factory (ies):

1. HANWHA TECHWIN (TIANJIN) CO.,LTD.
No.11 Weiliu Rd,Micro-Electronic Industrial Park,TEDA,Tianjin,300385,People's Republic of China

General product information:

Applied NEMA Rating : 4X

Model XNO-8080RN is basic model which was tested.

Basic Model	XNO-8080R* (*N:NT/P:PAL)
Series model	XNO-6080R*(*N:NT/P:PAL)

Model differences:

XNO-8080RN and XNO-8080RP and XNO-6080RN and XNO-6080RP

The model differences are only for function not related to the quality of enclosure integrity.

Type 4X Enclosures constructed for either indoor or outdoor use to provide a degree of protection to personnel against access to hazardous parts; to provide a degree of protection of the equipment inside the enclosure against ingress of solid foreign objects (falling dirt and windblown dust); to provide a degree of protection with respect to harmful effects on the equipment due to the ingress of water (rain, sleet, snow, splashing water, and hose directed water); that provides an increased level of protection against corrosion; and that will be undamaged by the external formation of ice on the enclosure.

Table 2-1
Comparison of Specific Applications of Enclosures for Indoor Nonhazardous (Unclassified) Locations

Provides a Degree of Protection against the Following Conditions	Type of Enclosure									
	1	2	4	4X	5	6	6P	12	12K	13
Access to hazardous parts	X	X	X	X	X	X	X	X	X	X
Ingress of solid foreign objects (falling dirt)	X	X	X	X	X	X	X	X	X	X
Ingress of water (dripping and light splashing)	...	X	X	X	X	X	X	X	X	X
Ingress of solid foreign objects (circulating dust, lint, fibers, and flyings **)	...	...	X	X	...	X	X	X	X	X
Ingress of solid foreign objects (settling airborne dust, lint, fibers, and flyings **)	...	...	X	X	X	X	X	X	X	X
Ingress of water (hosedown and splashing water)	...	...	X	X	...	X	X	...	...	...
Oil and coolant seepage	...	...	...	..	...	...	...	X	X	X
Oil or coolant spraying and splashing	...	...	...	...	...	...	...	...	...	X
Corrosive agents	...	...	...	X	...	...	X	...	...	...
Ingress of water (occasional temporary submersion)	...	...	...	...	...	X	X	...	...	...
Ingress of water (occasional prolonged submersion)	...	...	...	...	...	...	X	...	...	...

** These fibers and flyings are not considered Class III type ignitable fibers or combustible flyings. For Class III type ignitable fibers or flyings see the *National Electrical Code®*, Article 500.5(D).

Table 2-2
Comparison of Specific Applications of Enclosures for Indoor & Outdoor Nonhazardous (Unclassified) Locations

Provides a Degree of Protection Against the Following Conditions	Type of Enclosure									
	3	3X	3R	3RX	3S	3SX	4	4X	6	6P
Access to hazardous parts	X	X	X	X	X	X	X	X	X	X
Ingress of solid foreign objects (falling dirt)	X	X	X	X	X	X	X	X	X	X
Ingress of water (dripping and light splashing)	X	X	X	X	X	X	X	X	X	X
Ingress of water (rain, snow, and sleet **)	X	X	X	X	X	X	X	X	X	X
Sleet ***	...	...	...	...	X	X	...	...	...	...
Ingress of solid foreign objects (windblown dust, lint, fibers, and flyings****)	X	X	...	...	X	X	X	X	X	X
Ingress of water (hosedown and splashing water)	...	...	...	...	...	...	X	X	X	X
Corrosive agents	...	X	...	X	...	X	...	X	...	X
Ingress of water (occasional temporary submersion)	...	...	...	...	...	...	...	...	X	X
Ingress of water (occasional prolonged submersion)	...	...	...	...	...	...	...	...	...	X

** External operating mechanisms are not required to be operable when the enclosure is ice covered.
*** External operating mechanisms are operable when the enclosure is ice covered. See subsection 5.6.
**** These fibers and flyings are not considered Class III type ignitable fibers or combustible flyings. For Class III type ignitable fibers or flyings see the *National Electrical Code®*, Article 500.5(D).

Table 5-1A
Degrees of Protection Against Access to Hazardous Parts

Enclosure Type	Test Conditions	Degree of Protection		Corresponding IP First Characteristic Numeral
		Brief Description	Definition	
4X	5.7	Protected against access to hazardous parts with a wire	An access probe of 1.0 mm shall not penetrate	6

Table 5-1B
Degrees of Protection Against Solid Foreign Objects

Enclosure Type	Test Conditions	Degree of Protection		Corresponding IP First Characteristic Numeral
		Brief Description	Definition	
4X	Non-vented 5.7 Vented 5.5.1 Dust Blast Method	Windblown dust protected	No ingress of dust	6

Table 5-1C
Degrees of Protection against Water

Enclosure Type	Test Conditions	Degree of Protection		Corresponding IP Second Characteristic Numeral
		Brief Description	Definition	
4X	5.7	Protected against hose directed water	Water projected against the enclosure in any direction shall not enter	6 No Ingress Allowed*

Table 5-1D
Additional Protection

Enclosure Type	Test Conditions	Additional Protection		Corresponding IP Second Characteristic Numeral
		Brief Description	Definition	
4X	5.6 5.9 5.10	Special corrosion protection and undamaged by the external formation of ice	Enclosure provides increased corrosion protection and is not damaged by ice that forms on the outside	None

NEMA 250-2014			
Clause	Requirement + Test	Result - Remark	Verdict
3	**CONSTRUCTION**		
3.1	General		P
3.2	Units of Measurement		P
3.3	Materials-General	Enclosures are made of metal or polymeric materials	P
3.4	Materials-Polymeric	More than 650 mm^2 (1 in^2) in area Polymeric Materials used is declared as Min. V-2 Used to UL certified material. (See the attachment 2)	N/E
3.5	Corrosion Protection	Stainless steel and/or aluminium are declared as the materials used (See the attachment 2)	N/E
3.6	Openings	No openings in Product	N/A
3.7	Mounting	Mounting means are external to the equipment cavity (See the attachment 1)	P
3.8	Conduit Connection	No conduit connection (See the attachment 1)	N/A
3.9	Hubs and Fittings	No Hubs and Fittings	N/A
3.10	Knockouts	No Knockouts	N/A
3.11	External Operating Mechanisms	No External Operating Mechanisms	N/A
3.12	Access to Interior	Needs tool to open unit	P
3.13	Closing Hardware	No closing Hardware	N/A
3.14	Gaskets	Gaskets made of a silicone Sponge Rubber (no Elastomeric or Thermoplastic used) (See clause 5.14 and the attachment 2)	P
3.15	Observation Windows	No Observation Window	N/A
4	**MARKING**		

NEMA 250-2014			
Clause	Requirement + Test	Result - Remark	Verdict
4.1	Type Designations	"Type 4X" Marking is declared to be on the product before on the market	P
4.2	Supplemental Markings	Supplemental Marking (watertight/ corrosion resistant) is declared to be used when it is on the market. The required marking shall be added on the product)	P
4.3	Location of Markings	See the Attachment 3	P
4.4	Enclosure Orientation	No Particular Mounting Orientation	N/A
4.5	Conduit Hubs and Closure Plates	No Conduit Hubs and Closure Plates	N/A
4.6	Equipment Openings	No Openings on Unit	N/A
4.7	Drainage Openings	No Drain Openings	N/A
5	**DESIGN TESTS**		
5.1	General	See Table 5-1A to 5-1D and 5.1.5 in the General product information	P
5.2	Tests For Protection Against Access to Hazardous Parts	Rated 4X	N/A
5.3	Tests for Protection Against Ingress of Water (Dripping and Light Splashing)	Rated 4X	N/A
5.4	Tests for Protection Against Ingress of Water (Rain)	Rated 4X	N/A
5.5	Tests for Protection Against Ingress of Solid Foreign Objects (Setting Airborne Dust, Lint, Fibers, And Flings)	Non-vented (See clause 5.7)	N/A
5.6	External Icing Test	No external cavities to trap water when mounted in the normal position.	N/A
5.7	Tests for Protection Against Ingress of Water (Hosedown)	No entry of water See the test information	P
5.8	Indoor Corrosion Protection (Rust-Resistance Test (24-Hour Salt Spray Test))	See clause 3.5	N/E
5.9	Outdoor Corrosion Protection	See clause 3.5	N/E
5.10	Corrosion Protection-Type 3X, 3RX, 3SX, 4X Or 6P Enclosures	See clause 3.5	N/E

NEMA 250-2014			
Clause	Requirement + Test	Result - Remark	Verdict
5.11	Test for Protection Against Ingress of Water (Temporary Submersion)	Rated 4X	N/A
5.12	Test for Protection Against Ingress of Water (Prolonged Submersion)	Rated 4X	N/A
5.13	Oil Exclusion Test	Rated 4X	N/A
5.14	GASKET MATERIAL TESTS	The product itself(including gaskets) was conditioned at 70 ℃ for 168 hrs according to 5.14.3(Alternate Evaluation) before performing relevant required tests.	P
5.15	Test for Sharpness of Edges	No sharp edges	P

Test Information

	Hose Down Test : Clause 5.7	**P**

Description of Test

The enclosure and its external mechanisms were subjected to a stream of water from a hose that has a 25.4 mm (1 in) inside diameter nozzle and delivers at least 240 L (65 gal) per minute.

The nozzle was held from 3.0 to 3.5 m (10 to 12 feet) from the enclosure, and the spray of water was directed at all points of potential water entry such as seams, joints, external operating mechanisms, and such. The nozzle was moved along each test point one time at a uniform rate of 6 mm/sec(1/4 in/sec).

Sample Dimension(91.0 mm by 91.0 mm by 368.6 mm)

Test Duration = 198.9 secs

Acceptance conditions:

The enclosure shall be considered to have met the requirements if at the conclusion of the test no water has entered the enclosure

Test Results

Sample No (Model)	Water Flow	Presence of water inside	Result
XNO-8080RN	240 LPM	No	Pass

List of test equipment used:

Instr. Code	Instrument Type	Range Used	Mfr./Model	Calibration Date	
				Last	Due
S3-IP18	25.4mm Nozzle	25.4 mm	CTK/S3-IP18	-	Checked by calliper below before using
S1-SW2	Stop Watch	0.01 s	CASIO/ NONE	2016-03-16	2018-03-16
S1-D09	Steel Measuring Tape	5 m	KOMELON/KMC-74N	2013-06-11	2018-06-11
S3-IP20	Water flow meter	250LPM	Nuri tech/Z-4007	2016-02-23	2017-02-23
S1-D04	DIGITAL VERNIER CALIPER	150 mm	MITUTOYO/150 mm	2016-11-08	2017-11-08

Attachment 1 – Construction Diagram and installation method

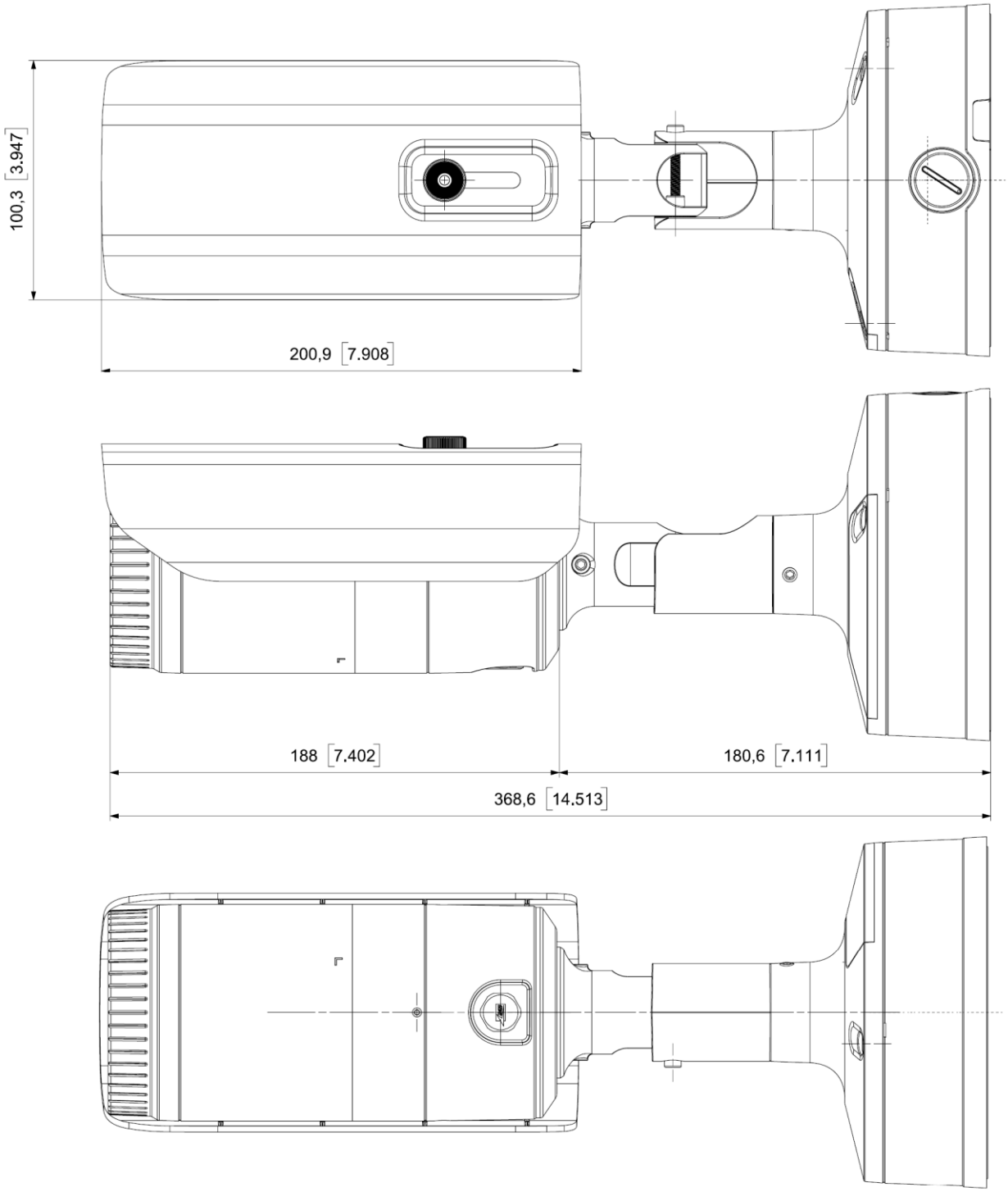

Attachment 1 – Construction Diagram and installation method

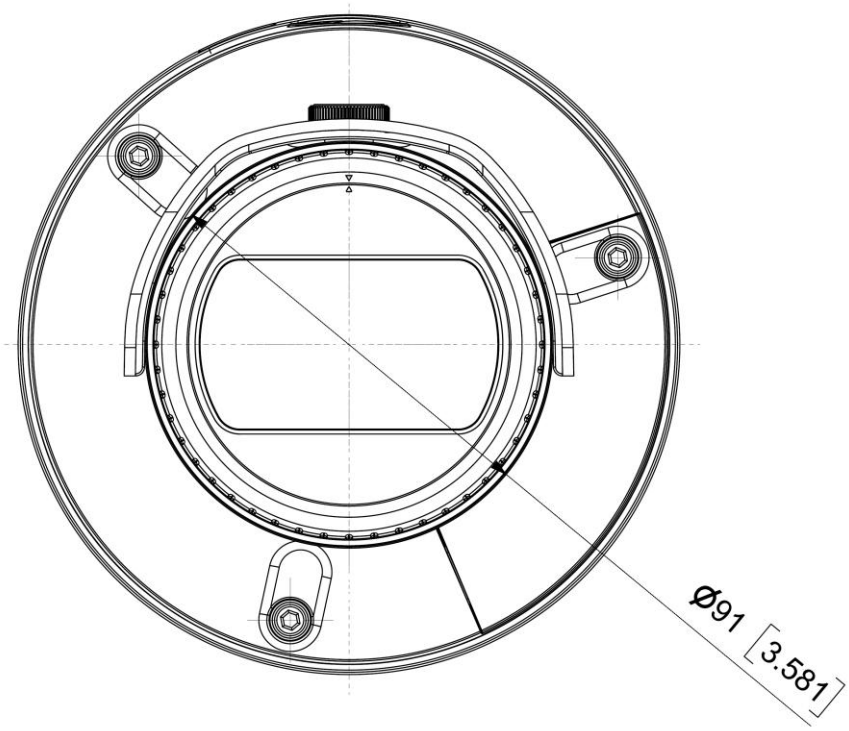

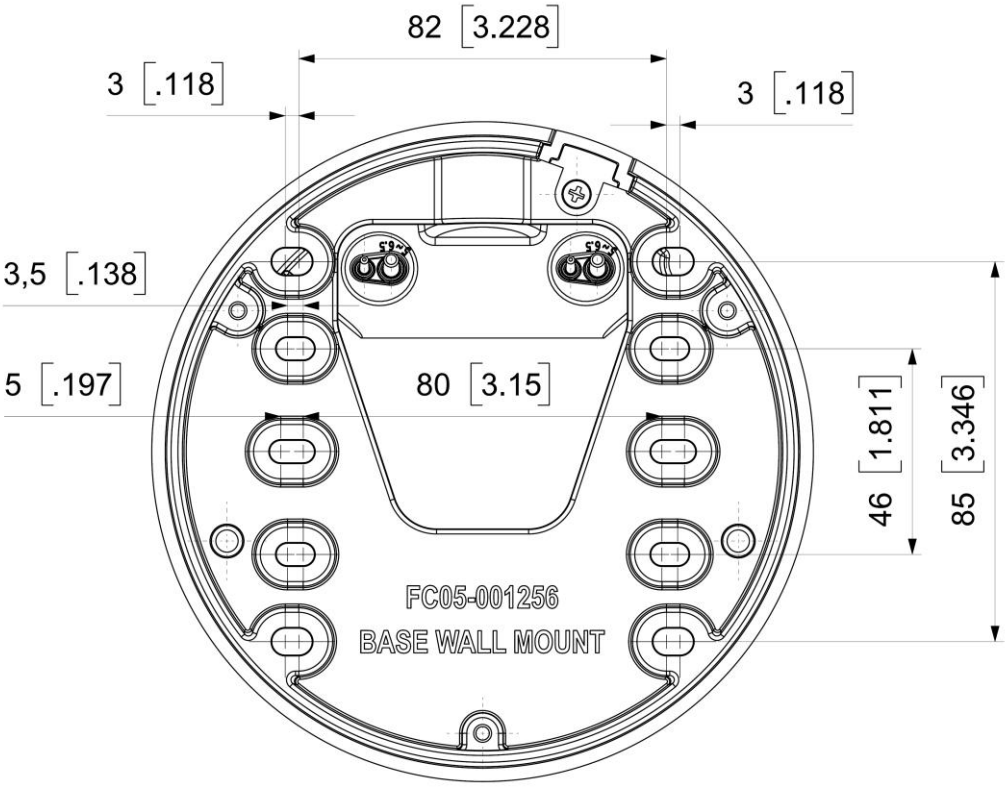

Attachment 1 – Construction Diagram and installation method

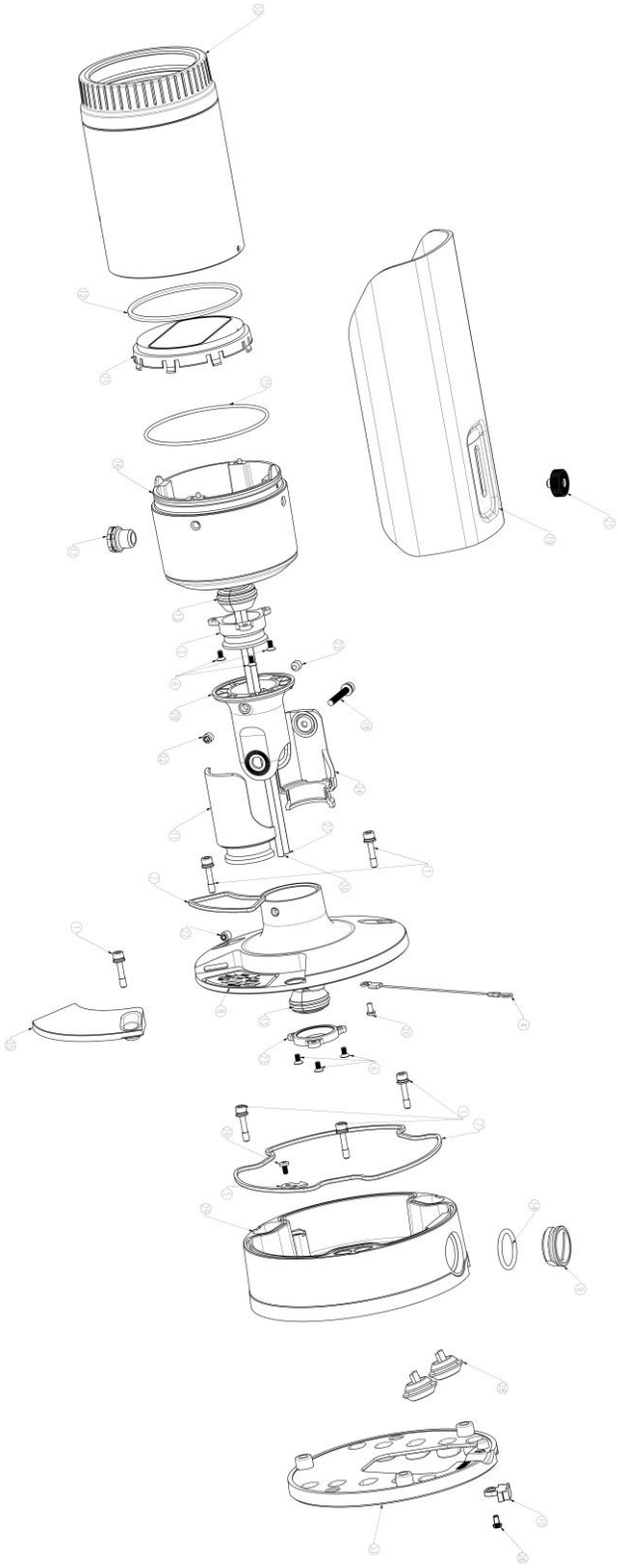

Attachment 1 – Construction Diagram and installation method

1	FC18-003309A	SCREW-MACHINE-HSHC;4,0.7,20,DOUBLE SEMS,		6
2	HP07-001179A	GASKET BUTTON_XNO-6080R		1
3	FC29-002456A	GUIDE-PANNING-SNO6084R;ALDC		1
4	RM01-003400A	WIRE,METALIC-SAFETY-SNO-8081R;STS 304		1
5	FC09-006670A	BRACKET-WIRE-SNO-8081R;SUS304,1.2		1
6	Z6003007801A	SCREW-MACHINE M3.0 x L6		6
7	HP07-001178A	GASKET BACK BOX_XNO-6080R		1
8	FC29-008673A	CASE TOP BB-2ND_XNO-6080R		1
9	Z7209015401A	3120V-CAP-BOLT		1
10	FC29-008748A	CAP-CABLE HOLE_XNO-6080R		1
11	FC39-001270B	BODY-TILT LEFT-SNO6084R;821KA-ZJS-1200		1
12	HP07-001176A	GASKET-WINDOW ORING_XNO-6080R		1
13	HP07-001180A	GASKET CABLE_XNO-6080R		2
14	FC18-001028A	O-RING;??2.8,OD27.5,SILICON,GRAY		1
15	HP07-001177A	GASKET-REAR COVER_XNO-6080R		1
16	FC15-005279A	COVER REAR_XNO-6080R		1
17	HP07-001187	GORE VENT-SCREW IN TYPE		1
18	Z6011000601A	HSH SCREW-DOUBLE SEMS		1
19	FC28-002444A	SHIELDSUN_XNO-6080R		1
20	FC39-001271A	BODY-PANNING-SNO6084R;821KA-ZJS1200		1
21	FC28-002278A	KNOB-SUNSHIELD-SCO2081R		1
22	Z6004041101A	CAM_PAN_SCREW		3
23	FC15-005367A	COVER-CABLE GASKET_XNO-6080R		1
24	FC39-001269B	BODY-TILT RIGHT-SNO6084R;821KA-ZJS-1200		1
25	FC28-002443A	DOOR BB BUTTON_XNO-6080R		1
26	Z9642306007	SCREW MACHINE, M3, L6, PH, BLACK		4
27	50160	CABLE-WIRE_XNO-6080R		1
28	MC06-001042A	BUSHING-CABLE SET-PNV-9080R		2
29	FC29-008671A	CASE BOTTOM BB-3RD_XNO-6080R-161116		1
30	50159	CABLE-MCX_XNO-6080R		1
31	AM07-008594A	ASSY WINDOW-3RD_XNO-6080R		1
32	FC29-008670A	CASE BODY_XNO-6080R		1
33	FC05-001256A	BASE WALL MOUNT-3RD_XNO-6080R		1
NO.	PART NO.	PART NAME	Spec	Q'TY

Attachment 2 – Parts List

NO	PART NO.	PART NAME	Qty(Base)	MATERIAL
1	Z6001049001A	SCREW-MACHINE;6001-000809,CH,+,**M2,L4**,NI	2	SWCH18A
2	FC28-002128A	PAD-THERMAL, 12X8;GP-1(350),1.0	4	SILICON RUBBER
3	EP07-001191A	SINK,HEAT LED	1	ALDC
4	HP07-001184A	GASKET-HOOD RUBBER	1	SILICON RUBBER
5	FC29-008669A	HOLDER LENS	1	PC+GF10, SI-3109GL
6	Z6003019601A	SCREW TAPTITE, **M2 L6**, BLK	2	SWCH18A
7	Z6003012501A	4748_TAPTITE_SCREW_M3_L6	1	SWCH18A
8	Z6003020401A	SCREW TAP TITIE, **M1.7 L4**, BLK	5	SWCH18A
9	FC18-003835A	SPACER		SUS304
10	Z6001049001A	SCREW-MACHINE;6001-000809,CH,+,M2,L4,NI	8	SWCH18A
11	FC09-007987A	BRACKET-PCB	1	ALUMINIUM, A5052
12	FC28-000761A	PAD THERMAL-30*30, 2.0T	1	SILICON RUBBER
13	FC28-000556A	PAD THERMAL-45*30, 2.0T	1	SILICON RUBBER
14	EP07-001192A	SINK,HEAT-NETWORK	1	ALDC
15	FC15-005279A	COVER-REAR	1	ALDC
16	FC29-002456A	GUIDE-PANNING-SNO6084R	1	ALDC
17	Z6003007801A	MACHINE SCREW(FLAT HEAD/접시,M3xL6 Ni)	6	SWCH18A
18	FC39-001271B	BODY-PANNING-SNO6084R;821KA-ZJS1200	1	ALDC
19	FC39-001269B	BODY-TILT RIGHT-SNO6084R;821KA-ZJS-1200	1	ALDC
20	FC39-001270B	BODY-TILT LEFT-SNO6084R;821KA-ZJS-1200	1	ALDC
21	Z6011000601A	HEXAGON_REC_M4L30	1	SUS
22	Z6004041101A	SETSCREW_SRN_M6P1L6	3	SUS
23	HP07-001177A	GASKET REAR O-RING	1	SILICON RUBBER
24	FC29-008673A	CASE-TOP-BB	1	SILICON RUBBER
25	HP07-001179A	GASKET BUTTON	1	SILICON RUBBER
26	FC15-005367A	COVER GASKET CABLE	1	ALDC
27	FC18-003309A	SCREW-MACHINE-HSHC;4,0.7,20,DOUBLE SEMS,	2	SWCH18A
28	Z9642306007	SCREW MACHINE, M3 L6, PH, BLACK	1	SWCH18A
29	RM01-003400A	WIRE,METALIC-SAFETY-SNO-8081R;STS 304	1	SUS
30	HP07-001180A	GASEKT CABLE	2	SILICON RUBBER
31	FC29-008670A	CASE-BODY	1	ALDC
32	HP07-001176A	GASKET WINDOW O-RING	1	SILICON RUBBER
33	FC37-001033A	WINDOW-IR	1	SC-1220UR, NH-1035
34	FC18-003309A	SCREW-MACHINE-HSHC;4,0.7,20,DOUBLE SEMS,	3	SWCH18A
35	FC29-008671A	CASE-BOTTOM-BB	1	ALDC
36	HP07-001178A	GASKET BACKBOX	1	SILICON RUBBER
37	FC29-003420B	CAP-BOLT;ADC12,DARK GRAY	1	ALDC
38	FC18-001028A	O-RING;Ø2.8,OD27.5,SILICON,GRAY	1	SILICON RUBBER
39	MC06-001042A	BUSHING CABLE SET	2	SILICON RUBBER
40	Z9642306007	SCREW MACHINE, M3 L6, PH, BLACK	1	SWCH18A
41	FC09-006670A	BRACKET-WIRE-SNO-8081R;SUS304,1.2	1	SUS304
42	FC28-002443A	DOOR BB BUTTON	1	ALDC
43	Z6001049001A	SCREW-MACHINE;6001-000809,CH,+,**M2,L4**,NI	1	SWCH18A
44	FC18-003309A	SCREW-MACHINE-HSHC;4,0.7,20,DOUBLE SEMS,	1	SUS
45	FC05-001256A	BASE WALL MOUNT	1	ALDC
46	Z6001047101A	SCREW FH-M3 L8	1	SWCH18A
47	FC29-008748A	CAP CABLE SLOT	1	PC, 925U
48	FC15-005278A	COVER SD CARD	1	NH-1035
49	Z9642306007	SCREW MACHINE, M3 L6, PH, BLACK	2	SWCH18A
50	FC18-001043A	SCREW-MACHINE;+,CH,M2,0.4,4,SUS(XM-7)	2	SWCH18A
51	FC28-002444A	SHIELD-SUN	1	PC, 925U
52	FC28-002278A	KNOB-SUNSHIELD,SCO-2081R	1	ALUMINIUM

CTK Co., Ltd.
(Ho-dong) 113, Yejik-ro, Cheoin-gu, Yongin-si, Gyeonggi-do, KOREA, REPUBLIC OF
Tel: +82-31-339-9970
Fax: +82-31-624-9501

Attachment 2 – Parts List

LOTTE ADVANCED MATERIALS

UL 인증 | 롯데첨단소재

INFINO	Grade	NH-1035

iq.ul.com

Component - Plastics [guide info] E115797

Lotte Advanced Materials Co Ltd
56 Gosan-ro, Uiwang-si Gyeonggi-do 437-711 KR

NH-1035(+)
Polycarbonate (PC), "INFINO", furnished as pellets

Color	Min Thk (mm)	Flame Class	HWI	HAI	RTI Elec	RTI Imp	RTI Str
ALL	1.5	V-0	-	-	80	80	80
	2.0-2.7	V-0, 5VB	-	-	80	80	80

Comparative Tracking Index (CTI): -
Inclined Plane Tracking (IPT): -
Dielectric Strength (kV/mm): -
Volume Resistivity (10^x ohm-cm): -
High-Voltage Arc Tracking Rate (HVTR): -
High Volt, Low Current Arc Resis (D495): -
Dimensional Stability (%): -

(+) - May be replaced by one, two, or three numbers and/or letter(s)

ANSI/UL 94 small-scale test data does not pertain to building materials, furnishings and related contents. ANSI/UL 94 small-scale test data is intended solely for determining the flammability of plastic materials used in the components and parts of end-product devices and appliances, where the acceptability of the combination is determined by UL.

Report Date: 1998-08-24
Last Revised: 2008-02-15

© 2016 UL LLC

IEC and ISO Test Methods

Test Name	Test Method	Units	Thk (mm)	Value
Flammability	IEC 60695-11-10, IEC 60695-11-20	Class (color)	1.5	V-0 (ALL)
			2.0-2.7	V-0, 5VB (ALL)
Glow-Wire Flammability (GWFI)	IEC 60695-2-12	C	-	-
Glow-Wire Ignition (GWIT)	IEC 60695-2-13	C	-	-
IEC Comparative Tracking Index	IEC 60112	Volts (Max)	-	-
IEC Ball Pressure	IEC 60695-10-2	C	-	-
ISO Heat Deflection (1.80 MPa)	ISO 75-2	C	-	-
ISO Tensile Strength	ISO 527-2	MPa	-	-
ISO Flexural Strength	ISO 178	MPa	-	-
ISO Tensile Impact	ISO 8256	kJ/m^2	-	-
ISO Izod Impact	ISO 180	kJ/m^2	-	-
ISO Charpy Impact	ISO 179-2	kJ/m^2	-	-

COPYRIGHT © 2016 by LOTTE ADVANCED MATERIALS CO., LTD. ALL RIGHTS RESERVED.

Attachment 2 – Parts List

LOTTE ADVANCED MATERIALS

UL 인증 | 롯데첨단소재

INFINO	Grade	SC-1220UR

iq.ul.com

Component - Plastics [guide info] E115797

Lotte Advanced Materials Co Ltd

56 Gosan-ro, Uiwang-si Gyeonggi-do 437-711 KR

SC-122(+)

Polycarbonate (PC), "INFINO", furnished as pellets

Color	Min Thk (mm)	Flame Class	HWI	HAI	RTI Elec	RTI Imp	RTI Str
ALL	0.75	V-2	-	-	80	80	80
	1.5	V-2	-	-	80	80	80
	2.5	V-2	-	-	80	80	80
	3.0	V-2	-	-	80	80	80
NC	3.2	V-2	-	-	80	80	80

Comparative Tracking Index (CTI): -
Inclined Plane Tracking (IPT): -
Dielectric Strength (kV/mm): -
Volume Resistivity (10^x ohm-cm): -
High-Voltage Arc Tracking Rate (HVTR): -
High Volt, Low Current Arc Resis (D495): -
Dimensional Stability (%): -

(+) - May be replaced by one, two, or three numbers and/or letter(s)

ANSI/UL 94 small-scale test data does not pertain to building materials, furnishings and related contents. ANSI/UL 94 small-scale test data is intended solely for determining the flammability of plastic materials used in the components and parts of end-product devices and appliances, where the acceptability of the combination is determined by UL.

Report Date: 1998-08-24

Last Revised: 2016-04-18

© 2016 UL LLC

IEC and ISO Test Methods

Test Name	Test Method	Units	Thk (mm)	Value
Flammability	IEC 60695-11-10	Class (color)	0.75	V-2 (ALL)
			1.5	V-2 (ALL)
			2.5	V-2 (ALL)
			3.0	V-2 (ALL)
			3.2	V-2 (NC)
Glow-Wire Flammability (GWFI)	IEC 60695-2-12	C	1.5	900
			2.5	925
			3.2	925
Glow-Wire Ignition (GWIT)	IEC 60695-2-13	C	1.5	800
			2.5	825
			3.2	850
IEC Comparative Tracking Index	IEC 60112	Volts (Max)	-	-
IEC Ball Pressure	IEC 60695-10-2	C	-	-
ISO Heat Deflection (1.80 MPa)	ISO 75-2	C	-	-
ISO Tensile Strength	ISO 527-2	MPa	-	-
ISO Flexural Strength	ISO 178	MPa	-	-
ISO Tensile Impact	ISO 8256	kJ/m^2	-	-
ISO Izod Impact	ISO 180	kJ/m^2	-	-
ISO Charpy Impact	ISO 179-2	kJ/m^2	-	-

COPYRIGHT © 2016 by LOTTE ADVANCED MATERIALS CO., LTD. ALL RIGHTS RESERVED.

CTK Co., Ltd.
(Ho-dong) 113, Yejik-ro, Cheoin-gu, Yongin-si, Gyeonggi-do, KOREA, REPUBLIC OF
Tel: +82-31-339-9970
Fax: +82-31-624-9501

Attachment 2 – Parts List

LOTTE ADVANCED MATERIALS

UL 인증 | 롯데첨단소재

INFINO	Grade	SI-3109GL

iq.ul.com

Component - Plastics [guide info] E115797

Lotte Advanced Materials Co Ltd
56 Gosan-ro, Uiwang-si Gyeonggi-do 437-711 KR

SI-3109(+)
Polycarbonate (PC), "INFINO", furnished as pellets

Color	Min Thk (mm)	Flame Class	HWI	HAI	RTI Elec	RTI Imp	RTI Str
ALL	0.8	V-2	3	3	80	80	80

Comparative Tracking Index (CTI): -
Inclined Plane Tracking (IPT): -
Dielectric Strength (kV/mm): -
Volume Resistivity (10^x ohm-cm): -
High-Voltage Arc Tracking Rate (HVTR): -
High Volt, Low Current Arc Resis (D495): -
Dimensional Stability (%): -

(+) - May be replaced by one, two, or three numbers and/or letter(s)

ANSI/UL 94 small-scale test data does not pertain to building materials, furnishings and related contents. ANSI/UL 94 small-scale test data is intended solely for determining the flammability of plastic materials used in the components and parts of end-product devices and appliances, where the acceptability of the combination is determined by UL.

Report Date: 2000-06-09
Last Revised: 2016-01-13

© 2016 UL LLC

IEC and ISO Test Methods

Test Name	Test Method	Units	Thk (mm)	Value
Flammability	IEC 60695-11-10	Class (color)	0.8	V-2 (ALL)
Glow-Wire Flammability (GWFI)	IEC 60695-2-12	C	-	-
Glow-Wire Ignition (GWIT)	IEC 60695-2-13	C	-	-
IEC Comparative Tracking Index	IEC 60112	Volts (Max)	-	-
IEC Ball Pressure	IEC 60695-10-2	C	-	-
ISO Heat Deflection (1.80 MPa)	ISO 75-2	C	-	-
ISO Tensile Strength	ISO 527-2	MPa	-	-
ISO Flexural Strength	ISO 178	MPa	-	-
ISO Tensile Impact	ISO 8256	kJ/m^2	-	-
ISO Izod Impact	ISO 180	kJ/m^2	-	-
ISO Charpy Impact	ISO 179-2	kJ/m^2	-	-

COPYRIGHT © 2016 by LOTTE ADVANCED MATERIALS CO., LTD. ALL RIGHTS RESERVED.

CTK Co., Ltd.
(Ho-dong) 113, Yejik-ro, Cheoin-gu, Yongin-si, Gyeonggi-do, KOREA, REPUBLIC OF
Tel: +82-31-339-9970
Fax: +82-31-624-9501

Attachment 2 – Parts List

Component - Plastics E207780

SABIC INNOVATIVE PLASTICS JAPAN L L C

PACIFIC GRADES - RESIN, 2-2 KINUGAOKA, MOKA-SHI TOCHIGI-KEN 321-4392 JP

925U(f1)(GG), 945U(f1)(GG), 955U(f1)(GG)

Polycarbonate (PC), "Lexan", furnished as pellets

Color	Min Thk (mm)	Flame Class	HWI	HAI	RTI Elec	RTI Imp	RTI Str
AO	1.5	V-0	3	3	130	115	125
	3.0	V-0	2	2	130	120	130
	6.0	V-0	1	2	130	120	130

Comparative Tracking Index (CTI): 3
Dielectric Strength (kV/mm): 24
High-Voltage Arc Tracking Rate (HVTR): 3
Dimensional Stability (%): 0.1

Inclined Plane Tracking (IPT): -
Volume Resistivity (10^x ohm-cm) : 15
High Volt, Low Current Arc Resis (D495): 7

(GG) - Denotes a global grade formulation previously in File E161759.

(f1) - Suitable for outdoor use with respect to exposure to Ultraviolet Light, Water Exposure and Immersion in accordance with UL 746C.

NOTE - Material designation may be followed by a color nomenclature consisiting of either an alpha/numeric or numeric/alpha combination.

ANSI/UL 94 small-scale test data does not pertain to building materials, furnishings and related contents. ANSI/UL 94 small-scale test data is intended solely for determining the flammability of plastic materials used in the components and parts of end-product devices and appliances, where the acceptability of the combination is determined by UL.

Report Date: 2001-04-06
Last Revised: 2007-01-31

© 2013 UL LLC

Attachment 3 – Photographs

<Photo 1 > Test Unit

<Photo 2 > Test Unit

Attachment 3 – Photographs

<Photo 3 > Test Unit

<Photo 4 > Test Unit

Attachment 3 – Photographs

<Photo 5 > Hose down test

<Photo 6 > Test Result

Attachment 3 – Photographs

<Photo 7 > Test Result

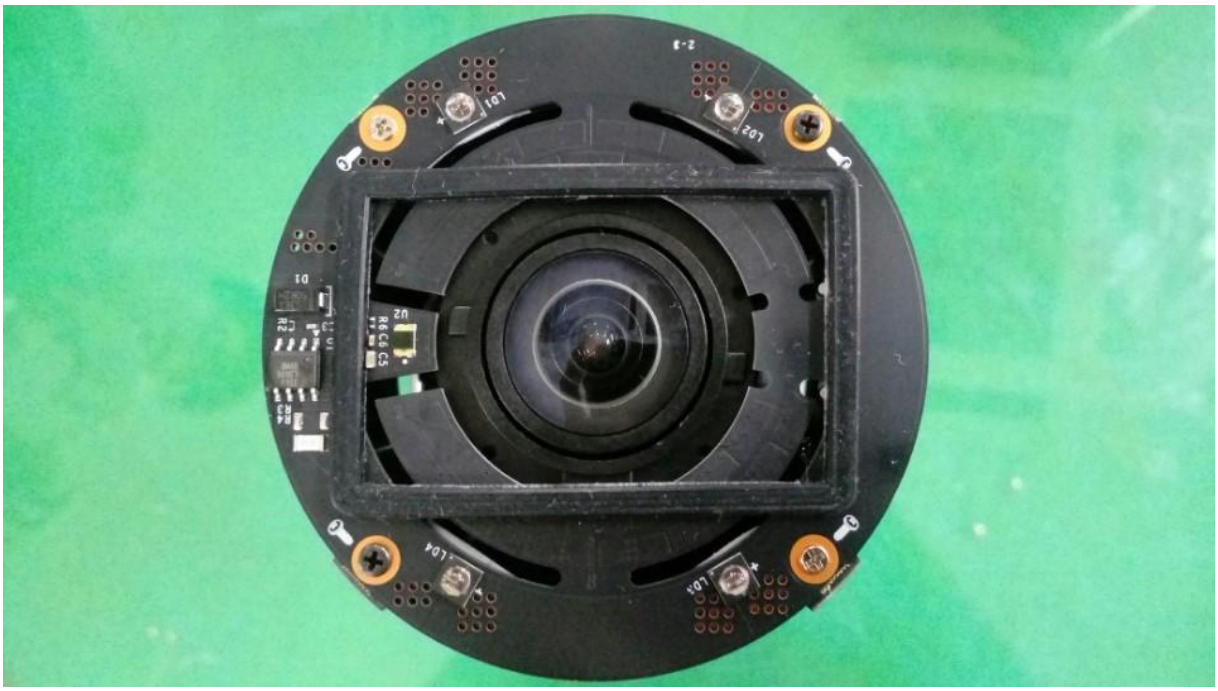

<Photo 8 > Test Result