TEST REPORT

CTK Co., Ltd.
(Ho-dong) 113, Yejik-ro, Cheoin-gu, Yongin-shi
Gyeonggi-do KOREA, REPUBLIC OF
Tel: +82-31-339-9970
Fax: +82-31-624-9501

REPORT No.:
CTK-2021-02997

1. Applicant

◦ Name.....: Hanwha Techwin Co., Ltd.

◦ Address .....: Hanwha Techwin R&D center, 6 Pangyo-ro 319Beon-gil, Bundang-gu, Seongnam-si, Gyeonggi-do, 13488 KOREA

◦ Date of Receipt .....: 2021-06-09

2. Manufacturer

◦ Name.....: HANWHA TECHWIN SECURITY VIETNAM CO.,LTD

◦ Address .....: Lot O-2, Que Vo Industrial Zone extended area, Nam Son commune, Bac Ninh city, Bac Ninh province, Vietnam

3. Test sample / Model ..... : NETWORK CAMERA / XNO-C9083R

4. Date(s) of test ..... : 2021-06-17 to 2021-06-24

5. Test Standard (Method) used... : NEMA 250-2014
Enclosures for Electrical Equipment (1000 Volts Maximum)

6. Results ..... : Pass

The results shown in this test report refer only to the sample(s) tested unless otherwise stated.
This report shall not be reproduced except in full without the written approval of CTK

Approval	Tested by: Min-Gi Mun (Signature)	Technical Manager: WonHyeon Choi (Signature)

2021-08-10

CTK Co., Ltd.

CTK Co., Ltd.
(Ho-dong) 113, Yejik-ro, Cheoin-gu, Yongin-shi
Gyeonggi-do KOREA, REPUBLIC OF
Tel: +82-31-339-9970
Fax: +82-31-624-9501

Test item description.....:	NETWORK CAMERA
Trade Mark.....:	WISENET
Manufacturer .....:	Lot O-2, Que Vo Industrial Zone extended area, Nam Son commune, Bac Ninh city, Bac Ninh province, Vietnam
Model/Type reference.....:	XNO-C9083R
Ratings.....:	Electrical DC 12 V ⎓ 13.2 W, 1.1 A PoE(48 V⎓) 12.95 W, 0.27 A Dimension : Ø 80 mm by 251.2 mm, 60 mm * 2, 40 mm * 2 Ø 85 mm by 266.9 mm, Ø 15 mm by 47.1 mm, Ø 5 mm by 15.7 * 7, Ø 145 mm by 455.3 mm, Ø 20 mm by 62.8 mm * 2, 50 mm * 2, 40 mm

List of Attachments (including a total number of pages in each attachment):

Attachment 1: 13-16 pages (Construction Diagram including installation method)

Attachment 2: 17-21 pages (Parts List)

Attachment 3: 22-28 pages (photographs)

Summary of testing:

Tests performed (name of test and test clause): **Clause 5.7(Hose Down Test)**	**Testing location:** CTK Co., Ltd. 142, Dongbu-ro, Cheoin-gu, Yongin-si, Gyeonggi-do, Republic of Korea

Copy of marking plate: The artwork above may be only a draft.

기기명칭: NETWORK CAMERA
모델명: XNO-C8083R
정격전압: DC 12V ⎓ 13.2W
PoE(48V ⎓) 12.95W
M/C: XNO-C8083R/KDO Fac. ID: D
DATE S/N: XXXXXXXXXXXXXXX
MAC ADDRESS: XX-XX-XX-XX-XX-XX
인증번호: R-R-StW-XNOC8083R
상호: 한화테크윈(주)
제조자/제조국가:한화테크윈(주)/한국

NETWORK CAMERA
MODEL: XNO-C8083R
DC 12V ⎓ 1.1A
PoE(48V ⎓) 0.27A
M/C: XNO-C8083R/KUS Fac. ID: D
DATE S/N: XXXXXXXXXXXXXXX
MAC ADDRESS: XX-XX-XX-XX-XX-XX
CAN ICES-3(A)/NMB-3(A)
HANWHA TECHWIN CO.,LTD.
MADE IN KOREA

기기명칭: NETWORK CAMERA
모델명: XNO-C7083R
정격전압: DC 12V ⎓ 12.5W
PoE(48V ⎓) 12.95W
M/C: XNO-C7083R/KDO Fac. ID: D
DATE S/N: XXXXXXXXXXXXXXX
MAC ADDRESS: XX-XX-XX-XX-XX-XX
인증번호: R-R-StW-XNOC7083R
상호: 한화테크윈(주)
제조자/제조국가:한화테크윈(주)/한국

NETWORK CAMERA
MODEL: XNO-C7083R
DC 12V ⎓ 1.05A
PoE(48V ⎓) 0.27A
M/C: XNO-C7083R/KUS Fac. ID: D
DATE S/N: XXXXXXXXXXXXXXX
MAC ADDRESS: XX-XX-XX-XX-XX-XX
CAN ICES-3(A)/NMB-3(A)
HANWHA TECHWIN CO.,LTD.
MADE IN KOREA

기기명칭: NETWORK CAMERA
모델명: XNO-C6083R
정격전압: DC 12V ⎓ 12.5W
PoE(48V ⎓) 12.95W
M/C: XNO-C6083R/KDO Fac. ID: D
DATE S/N: XXXXXXXXXXXXXXX
MAC ADDRESS: XX-XX-XX-XX-XX-XX
인증번호: R-R-StW-XNOC6083R
상호: 한화테크윈(주)
제조자/제조국가:한화테크윈(주)/한국

NETWORK CAMERA
MODEL: XNO-C6083R
DC 12V ⎓ 1.05A
PoE(48V ⎓) 0.27A
M/C: XNO-C6083R/KUS Fac. ID: D
DATE S/N: XXXXXXXXXXXXXXX
MAC ADDRESS: XX-XX-XX-XX-XX-XX
CAN ICES-3(A)/NMB-3(A)
HANWHA TECHWIN CO.,LTD.
MADE IN KOREA

Test item particulars.....:	Network Camera
Classification of installation and use .....:	Outdoor(Watertight/Corrosion Resistant)
Possible test case verdicts:	
- test case does not apply to the test object .....:	N/A
- test object does meet the requirement.....:	P (Pass)
- test object does not meet the requirement .....:	F (Fail)
- test case does not evaluated to the test object :	N/E

General remarks:

"(See Enclosure #)" refers to additional information appended to the report.
"(See appended table)" refers to a table appended to the report.

Throughout this report a ☐ comma / ☒ point is used as the decimal separator.

Clause numbers between brackets refer to clauses in NEMA 250-2014

Name and address of factory (ies):

1. HANWHA TECHWIN SECURITY VIETNAM CO.,LTD

Lot O-2, Que Vo Industrial Zone extended area, Nam Son commune, Bac Ninh city, Bac Ninh province, Vietnam

2. D-TECH CO.,LTD.

173-25, Saneop-ro, Gwonseon-gu, Suwon-si, Gyeonggi-do, Korea (Suwon Industrial Complex)

General product information:

Applied NEMA Rating : 4X

Model XNO-C9083R is basic model which was tested.

Basic Model	XNO-C9083R
Series model	XNO-C8083R, XNO-C7083R, XNO-C6083R

Model differences:

The model differences are only for function not related to the quality of enclosure integrity.

Type 4X Enclosures constructed for either indoor or outdoor use to provide a degree of protection to personnel against access to hazardous parts; to provide a degree of protection of the equipment inside the enclosure against ingress of solid foreign objects (falling dirt and windblown dust); to provide a degree of protection with respect to harmful effects on the equipment due to the ingress of water (rain, sleet, snow, splashing water, and hose directed water); that provides an increased level of protection against corrosion; and that will be undamaged by the external formation of ice on the enclosure.

Table 2-1
Comparison of Specific Applications of Enclosures for Indoor Nonhazardous (Unclassified) Locations

Provides a Degree of Protection against the Following Conditions	Type of Enclosure									
	1	2	4	4X	5	6	6P	12	12K	13
Access to hazardous parts	X	X	X	X	X	X	X	X	X	X
Ingress of solid foreign objects (falling dirt)	X	X	X	X	X	X	X	X	X	X
Ingress of water (dripping and light splashing)	...	X	X	X	X	X	X	X	X	X
Ingress of solid foreign objects (circulating dust, lint, fibers, and flyings **)	...	...	X	X	...	X	X	X	X	X
Ingress of solid foreign objects (settling airborne dust, lint, fibers, and flyings **)	...	...	X	X	X	X	X	X	X	X
Ingress of water (hosedown and splashing water)	...	...	X	X	...	X	X	...	...	...
Oil and coolant seepage	...	...	...	..	...	...	...	X	X	X
Oil or coolant spraying and splashing	...	...	...	...	...	...	...	...	...	X
Corrosive agents	...	...	...	X	...	...	X	...	...	...
Ingress of water (occasional temporary submersion)	...	...	...	...	...	X	X	...	...	...
Ingress of water (occasional prolonged submersion)	...	...	...	...	...	...	X	...	...	...

** These fibers and flyings are not considered Class III type ignitable fibers or combustible flyings. For Class III type ignitable fibers or flyings see the *National Electrical Code®*, Article 500.5(D).

Table 2-2
Comparison of Specific Applications of Enclosures for Indoor & Outdoor Nonhazardous (Unclassified) Locations

Provides a Degree of Protection Against the Following Conditions	Type of Enclosure									
	3	3X	3R	3RX	3S	3SX	4	4X	6	6P
Access to hazardous parts	X	X	X	X	X	X	X	X	X	X
Ingress of solid foreign objects (falling dirt)	X	X	X	X	X	X	X	X	X	X
Ingress of water (dripping and light splashing)	X	X	X	X	X	X	X	X	X	X
Ingress of water (rain, snow, and sleet **)	X	X	X	X	X	X	X	X	X	X
Sleet ***	...	...	...	...	X	X	...	...	...	...
Ingress of solid foreign objects (windblown dust, lint, fibers, and flyings****)	X	X	...	...	X	X	X	X	X	X
Ingress of water (hosedown and splashing water)	...	...	...	...	...	...	X	X	X	X
Corrosive agents	...	X	...	X	...	X	...	X	...	X
Ingress of water (occasional temporary submersion)	...	...	...	...	...	...	...	...	X	X
Ingress of water (occasional prolonged submersion)	...	...	...	...	...	...	...	...	...	X

** External operating mechanisms are not required to be operable when the enclosure is ice covered.
*** External operating mechanisms are operable when the enclosure is ice covered. See subsection 5.6.
**** These fibers and flyings are not considered Class III type ignitable fibers or combustible flyings. For Class III type ignitable fibers or flyings see the *National Electrical Code®*, Article 500.5(D).

Table 5-1A
Degrees of Protection Against Access to Hazardous Parts

Enclosure Type	Test Conditions	Degree of Protection		Corresponding IP First Characteristic Numeral
		Brief Description	Definition	
4X	5.7	Protected against access to hazardous parts with a wire	An access probe of 1.0 mm shall not penetrate	6

Table 5-1B
Degrees of Protection Against Solid Foreign Objects

Enclosure Type	Test Conditions	Degree of Protection		Corresponding IP First Characteristic Numeral
		Brief Description	Definition	
4X	Non-vented 5.7	Windblown dust protected	No ingress of dust	6
	Vented 5.5.1 Dust Blast Method			

Table 5-1C
Degrees of Protection against Water

Enclosure Type	Test Conditions	Degree of Protection		Corresponding IP Second Characteristic Numeral
		Brief Description	Definition	
4X	5.7	Protected against hose directed water	Water projected against the enclosure in any direction shall not enter	6 No Ingress Allowed*

Table 5-1D
Additional Protection

Enclosure Type	Test Conditions	Additional Protection		Corresponding IP Second Characteristic Numeral
		Brief Description	Definition	
4X	5.6 5.9 5.10	Special corrosion protection and undamaged by the external formation of ice	Enclosure provides increased corrosion protection and is not damaged by ice that forms on the outside	None

NEMA 250-2014			
Clause	Requirement + Test	Result - Remark	Verdict
3	**CONSTRUCTION**		
3.1	General		P
3.2	Units of Measurement		P
3.3	Materials-General	Enclosures are made of metal or polymeric materials	P
3.4	Materials-Polymeric	More than 650 mm^2 (1 in^2) in area Polymeric Materials used is declared as Min. V-2 Used to UL certified material. (See the attachment 2)	N/E
3.5	Corrosion Protection	Stainless steel and/or aluminium are declared as the materials used (See the attachment 2)	N/E
3.6	Openings	No openings in Product	N/A
3.7	Mounting	Mounting means are external to the equipment cavity (See the attachment 1)	P
3.8	Conduit Connection	No conduit connection (See the attachment 1)	N/A
3.9	Hubs and Fittings	No Hubs and Fittings	N/A
3.10	Knockouts	No Knockouts	N/A
3.11	External Operating Mechanisms	No External Operating Mechanisms	N/A
3.12	Access to Interior	Needs tool to open unit	P
3.13	Closing Hardware	No closing Hardware	N/A
3.14	Gaskets	Gaskets made of a silicone Sponge Rubber (no Elastomeric or Thermoplastic used) (See clause 5.14 and the attachment 2)	P
3.15	Observation Windows	No Observation Window	N/A
4	**MARKING**		

NEMA 250-2014			
Clause	Requirement + Test	Result - Remark	Verdict
4.1	Type Designations	"Type 4X" Marking is declared to be on the product before on the market	P
4.2	Supplemental Markings	Supplemental Marking (watertight/ corrosion resistant) is declared to be used when it is on the market. The required marking shall be added on the product)	P
4.3	Location of Markings	See the Attachment 3	P
4.4	Enclosure Orientation	No Particular Mounting Orientation	N/A
4.5	Conduit Hubs and Closure Plates	No Conduit Hubs and Closure Plates	N/A
4.6	Equipment Openings	No Openings on Unit	N/A
4.7	Drainage Openings	No Drain Openings	N/A
5	**DESIGN TESTS**		
5.1	General	See Table 5-1A to 5-1D and 5.1.5 in the General product information	P
5.2	Tests For Protection Against Access to Hazardous Parts	Rated 4X	N/A
5.3	Tests for Protection Against Ingress of Water (Dripping and Light Splashing)	Rated 4X	N/A
5.4	Tests for Protection Against Ingress of Water (Rain)	Rated 4X	N/A
5.5	Tests for Protection Against Ingress of Solid Foreign Objects (Setting Airborne Dust, Lint, Fibers, And Flings)	Non-vented (See clause 5.7)	N/A
5.6	External Icing Test	No external cavities to trap water when mounted in the normal position.	N/A
5.7	Tests for Protection Against Ingress of Water (Hosedown)	No entry of water See the test information	P
5.8	Indoor Corrosion Protection (Rust-Resistance Test (24-Hour Salt Spray Test))	See clause 3.5	N/E
5.9	Outdoor Corrosion Protection	See clause 3.5	N/E
5.10	Corrosion Protection-Type 3X, 3RX, 3SX, 4X Or 6P Enclosures	See clause 3.5	N/E

NEMA 250-2014			
Clause	Requirement + Test	Result - Remark	Verdict
5.11	Test for Protection Against Ingress of Water (Temporary Submersion)	Rated 4X	N/A
5.12	Test for Protection Against Ingress of Water (Prolonged Submersion)	Rated 4X	N/A
5.13	Oil Exclusion Test	Rated 4X	N/A
5.14	GASKET MATERIAL TESTS	The product itself(including gaskets) was conditioned at 70 ℃ for 168 hrs according to 5.14.3(Alternate Evaluation) before performing relevant required tests.	P
5.15	Test for Sharpness of Edges	No sharp edges	P

NEMA 250-2014			
Clause	Requirement + Test	Result - Remark	Verdict

Test Information

	Hose Down Test : Clause 5.7	**P**

Description of Test

The enclosure and its external mechanisms were subjected to a stream of water from a hose that has a 25.4 mm (1 in) inside diameter nozzle and delivers at least 240 L (65 gal) per minute.

The nozzle was held from 3.0 to 3.5 m (10 to 12 feet) from the enclosure, and the spray of water was directed at all points of potential water entry such as seams, joints, external operating mechanisms, and such. The nozzle was moved along each test point one time at a uniform rate of 6 mm/sec(1/4 in/sec).

Sample Dimension(Ø 80 mm by 251.2 mm, 60 mm * 2, 40 mm * 2, Ø 85 mm by 266.9 mm,
Ø 15 mm by 47.1 mm, Ø 5 mm by 15.7 * 7, Ø 145 mm by 455.3 mm,
Ø 20 mm by 62.8 mm * 2, 50 mm * 2, 40 mm)

Test Duration = 266 secs

Acceptance conditions:

The enclosure shall be considered to have met the requirements if at the conclusion of the test no water has entered the enclosure

Test Results

Sample No (Model)	Water Flow	Presence of water inside	Result
XNO-C9083R	240 LPM	No	Pass

List of test equipment used:

Instr. Code	Instrument Type	Range Used	Mfr./Model	Calibration Date	
				Last	Due
S3-IP18	25.4mm Nozzle	25.4 mm	CTK/S3-IP18	-	Checked by calliper below before using
S1-SW2	Stop Watch	0.01 s	CASIO/ NONE	2021-03-19	2023-03-03
C-S1-D09	Steel Measuring Tape	5 m	KOMELON/KMC-74N	2021-06-23	2023-06-18
S3-IP23	Water flow meter	250LPM	Nuri tech/ Z-6504	2021-07-08	2022-06-30
C-S1-D02	DIGITAL VERNIER CALIPER	150 mm	MITUTOYO/150 mm	2020-09-19	2021-08-24

Attachment 1 – Construction Diagram and installation method

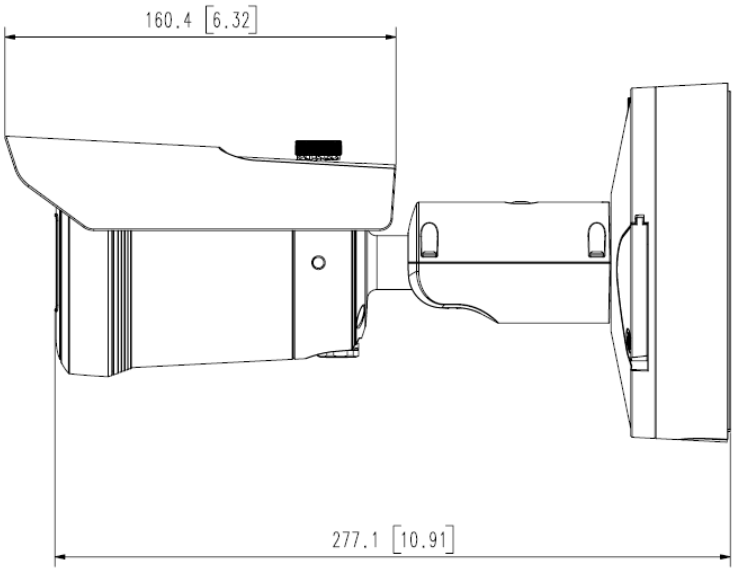

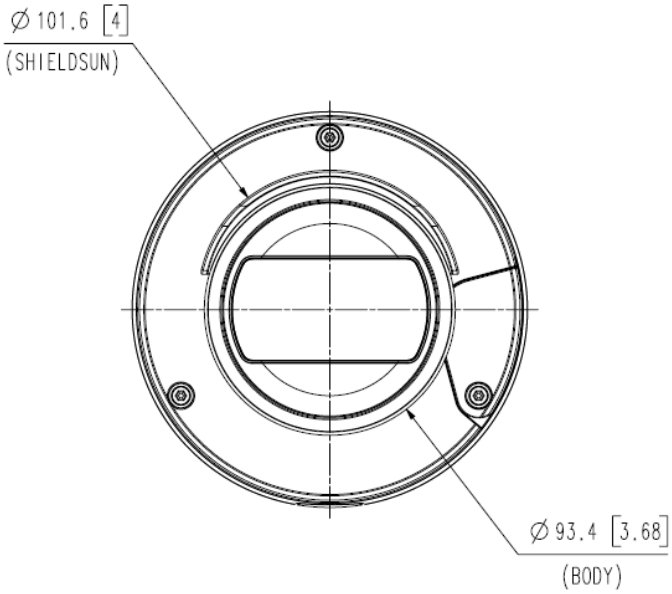

Attachment 1 – Construction Diagram and installation method

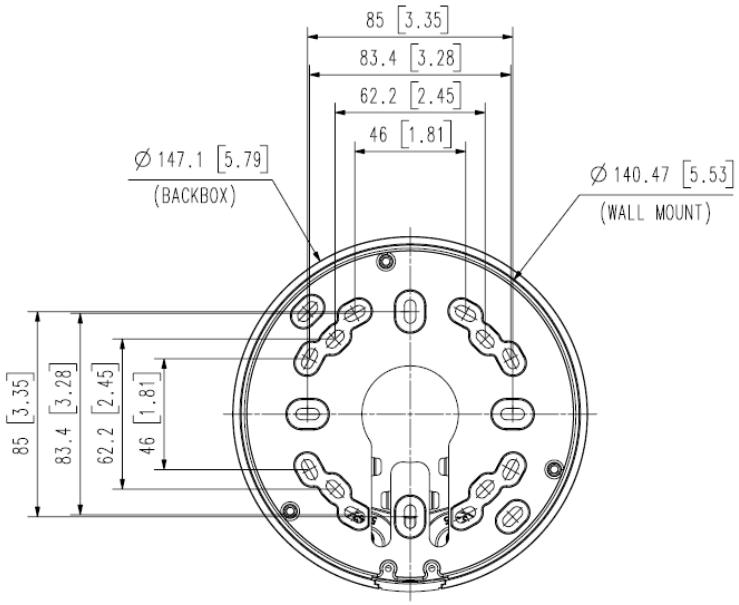

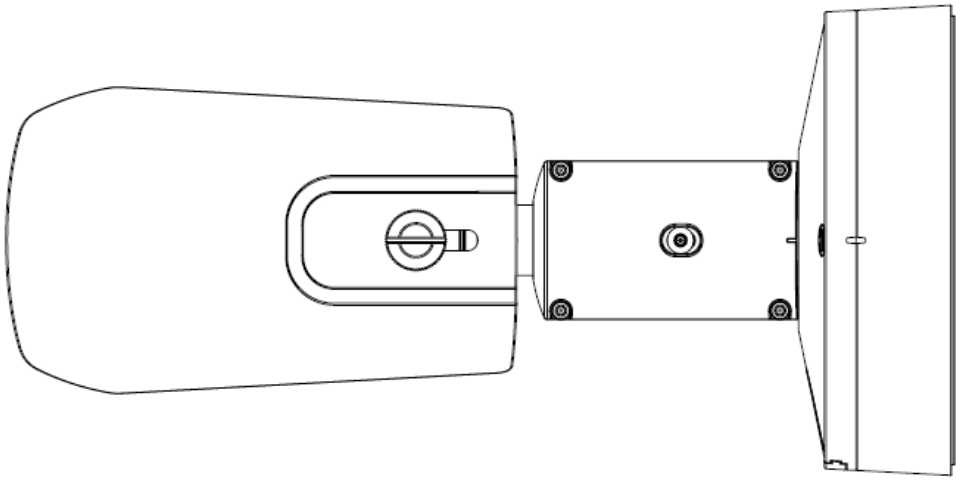

Attachment 1 – Construction Diagram and installation method

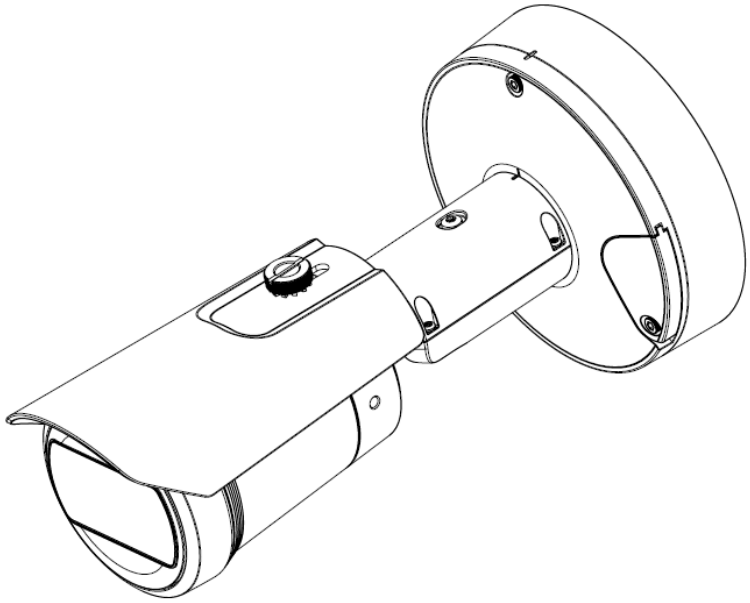

Attachment 1 – Construction Diagram and installation method

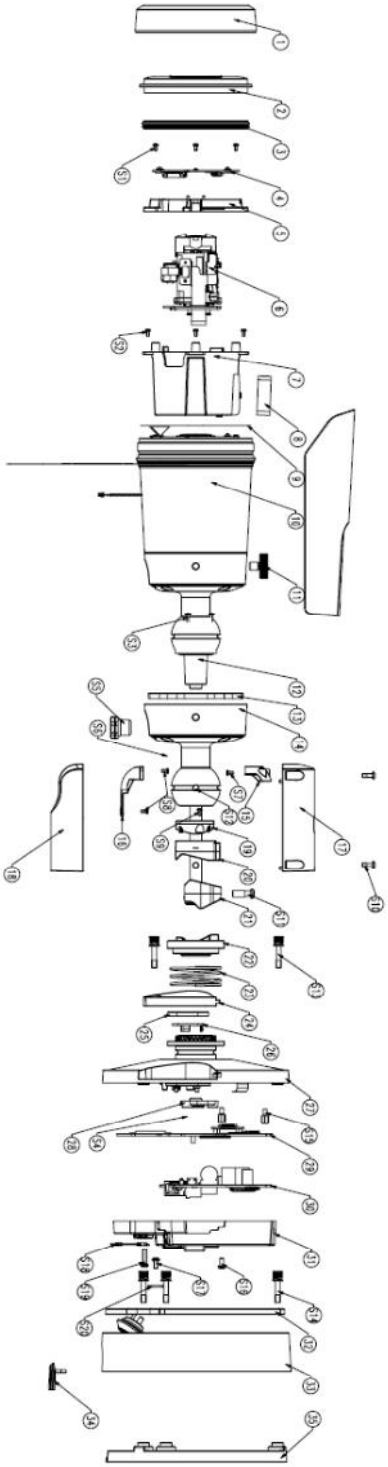

Attachment 2 – Parts List

No	CODE	NAME	Q'TY	REMARK
1	FC15-008242A	COVER FRONT	1	
2	AM07-015338A	ASSY WINDOW FRONT	1	
3	HP07-001636A	GASKET WINDOW	1	
4	AM06-009957A	ASSY,PCB IR	1	
5	EP07-001621A	SINK HEAT IR	1	
6	AM07-007330A	ASSY,LENS	1	
7	FC29-014051A	HOLDER LENS-C6083R	1	C6083R, C7083R
	FC29-014052A	HOLDER LENS-C9083R	1	C8083R, C9083R
8	Z3105004301A	DC FAN	1	
9	FC36-001442A	SHEET-PROTECT WINDOW	1	
10	FC29-014050A	CASE BODY	1	
11	FC28-003242B	KNOB-SHIELD SUN	1	
12	FC15-008257A	COVER BUSHIONG-WD	1	
13	HP07-001637A	GASKET REAR	1	
14	FC04-001011A	BALL BRACKET	1	
15	FC28-003424A	PAD-RB-CASE-TOP	1	
16	FC28-003425A	PAD-RB-CASE-BOTTOM	1	
17	FC29-014039B	CASE-TOP_BRACKET-PAD	1	
18	FC29-014048B	CASE-BOTTOM_BRACKET-PAD	1	
19	FC28-003426A	PAD-RUBBER-LOCKER	1	
20	FC28-003367B	LOCKER-FRONT-BRACKET	1	
21	FC29-014038A	PUSHER-BRACKET	1	
22	FC29-003369A	LOCKER-REAR-BRACKET	1	
23	FC38-001279A	SPRING-BRACKET	1	
24	FC28-003368A	DOOR BUTTON	1	
25	HP07-001639A	GASKET DOOR	1	
26	FC15-008243A	COVER INTERFACE	1	
27	FC29-014047A	CASE TOP BACKBOX	1	
28	FC15-008640A	COVER-BUSHING-85	1	

Attachment 2 – Parts List

No	CODE	NAME	Q'TY	REMARK
29	AM06-010123A	ASSY,PCB-NETWORK	1	
30	AM06-009972A	ASSY,PCB-MAIN	1	
31	FC15-008244A	COVER MAIN PCB	1	
32	HP07-001638A	GASKET BACKBOX	1	
33	FC29-014049A	CASE BOTTOM BACKBOX	1	
34	FC15-008241A	COVER CONDUIT	1	
35	FC09-012507A	BRACKET WALL MOUNT	1	
S1	Z9761208007	TAPPING SCREW(M2xL8)	4	
S2			4	
S3	Z9642206007	MACHINE SCREW(M2xL6)	3	
S4			3	
S5	HP06-001187	GORE-VENT	1	
S6	Z6003013601A	SCREW-TAPTYPE;6003-000275,BH,+,B,M3,L10)	4	
S7	Z6001055101A	MACHINE SCREW(M2xL4)	2	
S8			4	
S9			2	
S10	FC18-001418A	MACHINE SCREW BH (M3xL8)	4	
S11	FC18-006033A	MACHINE SCREW TORX 20 BH (M4xL18)	1	
S12	FC29-014053A	SUPPORT PIN	2	
S13	FC18-003309A	MACHINE SCREW HEX (M4xL20)	3	
S14			3	
S15	FC29-014054A	SUPPORT PCB	2	
S16	Z9642306001	MACHINE SCREW (M3xL6)	1	
S17	Z9642306007	MACHINE SCREW PH (M3xL6)	1	
S18	RW01-005941A	WIRE-SAFETY	1	
S19	Z6001044701A	MACHINE SCREW BH (M3xL12)	1	
S20	FC09-0066701A	BRACKET-WIRE	1	

Attachment 2 – Parts List

PROSPECTOR® CLICK TO CONTINUE
View additional material information including performance and processing data

The information presented on the UL Prospector datasheet was acquired by UL Prospector from the producer of the material. UL Prospector makes substantial efforts to assure the accuracy of this data. However, UL Prospector assumes no responsibility for the data values and strongly encourages that upon final material selection, data points are validated with the material supplier.

Component - Plastics E56070
Guide Information

CHI MEI CORPORATION
59-1 SAN CHIA, JEN TE, TAINAN 717 TW

PC-6715VT(f1)(a)
Polycarbonate (PC) "WONDERLITE", furnished as pellets

Color	Min. Thk (mm)	Flame Class	HWI	HAI	RTI Elec	RTI Imp	RTI Str
ALL	1.5	V-0	3	1	130	115	125
	3.0	V-0, 5VA	3	1	130	120	130

Comparative Tracking Index (CTI): 2
Inclined Plane Tracking (IPT) kV: -
Dielectric Strength (kV/mm): 30
Volume Resistivity (10^x ohm-cm): 14
High-Voltage Arc Tracking Rate (HVTR): 2
High Volt, Low Current Arc Resis (D495): 6
Dimensional Stability (%): 0.00

(a) - Ball pressure temperature is in accordance with IEC 60695-10-2 Method B.
(f1) - Suitable for outdoor use with respect to exposure to Ultraviolet Light, Water Exposure and Immersion in accordance with UL 746C.

ANSI/UL 94 small-scale test data does not pertain to building materials, furnishings and related contents. ANSI/UL 94 small-scale test data is intended solely for determining the flammability of plastic materials used in the components and parts of end-product devices and appliances, where the acceptability of the combination is determined by UL.

Report Date: 2001-09-25
Last Revised: 2019-10-23

© 2019 UL LLC

IEC and ISO Test Methods

Test Name	Test Method	Units	Thk (mm)	Value
Flammability	IEC 60695-11-10, IEC 60695-11-20	Class (color)	1.5	V-0 (ALL)
			3.0	V-0, 5VA (ALL)
Glow-Wire Flammability (GWFI)	IEC 60695-2-12	°C	1.5	960
			3.0	960
Glow-Wire Ignition (GWIT)	IEC 60695-2-13	°C	1.5	825
			3.0	850
IEC Comparative Tracking Index	IEC 60112	Volts (Max)	-	-
IEC Ball Pressure	IEC 60695-10-2	°C	-	135
ISO Heat Deflection (1.80 MPa)	ISO 75-2	°C	-	-
ISO Tensile Strength	ISO 527-2	MPa	-	-
ISO Flexural Strength	ISO 178	MPa	-	-
ISO Tensile Impact	ISO 8256	kJ/m²	-	-
ISO Izod Impact	ISO 180	kJ/m²	-	-
ISO Charpy Impact	ISO 179-2	kJ/m²	-	-

CTK Co., Ltd.
(Ho-dong) 113, Yejik-ro, Cheoin-gu, Yongin-shi
Gyeonggi-do KOREA, REPUBLIC OF
Tel: +82-31-339-9970
Fax: +82-31-624-9501

Attachment 2 – Parts List

Component - Plastics E115797

Guide Information

LOTTE ADVANCED MATERIALS CO LTD

56 Gosan-ro, Uiwang-si Gyeonggi-do 437-711 KR

QC-122(+)(f1)

Polycarbonate (PC) "INFINO", furnished as pellets

Color	Min. Thk (mm)	Flame Class	HWI	HAI	RTI Elec	RTI Imp	RTI Str
ALL	1.6	V-2	3	0	130	125	125
	3.2	V-2	2	0	130	130	130

Comparative Tracking Index (CTI): 0
Inclined Plane Tracking (IPT) kV: -
Dielectric Strength (kV/mm): -
Volume Resistivity (10^x ohm-cm): 16
High-Voltage Arc Tracking Rate (HVTR): 2
High Volt, Low Current Arc Resis (D495): 5
Dimensional Stability (%): -

(+) - May be replaced by one, two, or three numbers and/or letter(s)
(f1) - Suitable for outdoor use with respect to exposure to Ultraviolet Light, Water Exposure and Immersion in accordance with UL 746C.

ANSI/UL 94 small-scale test data does not pertain to building materials, furnishings and related contents. ANSI/UL 94 small-scale test data is intended solely for determining the flammability of plastic materials used in the components and parts of end-product devices and appliances, where the acceptability of the combination is determined by UL.

Report Date: 2008-10-17
Last Revised: 2018-12-11

© 2019 UL LLC

IEC and ISO Test Methods

Test Name	Test Method	Units	Thk (mm)	Value
Flammability	IEC 60695-11-10	Class (color)	1.6	V-2 (ALL)
			3.2	V-2 (ALL)
Glow-Wire Flammability (GWFI)	IEC 60695-2-12	°C	1.6	850
			3.2	850
Glow-Wire Ignition (GWIT)	IEC 60695-2-13	°C	1.6	900
			3.2	875
IEC Comparative Tracking Index	IEC 60112	Volts (Max)	-	-
IEC Ball Pressure	IEC 60695-10-2	°C	-	-
ISO Heat Deflection (1.80 MPa)	ISO 75-2	°C	-	-
ISO Tensile Strength	ISO 527-2	MPa	-	-
ISO Flexural Strength	ISO 178	MPa	-	-
ISO Tensile Impact	ISO 8256	kJ/m^2	-	-
ISO Izod Impact	ISO 180	kJ/m^2	-	-
ISO Charpy Impact	ISO 179-2	kJ/m^2	-	-

Component - Plastics E115797

Guide Information

LOTTE ADVANCED MATERIALS CO LTD

56 Gosan-ro, Uiwang-si Gyeonggi-do 437-711 KR

QC-122(+)(f2)

Polycarbonate (PC) "INFINO", furnished as pellets

Color	Min. Thk (mm)	Flame Class	HWI	HAI	RTI Elec	RTI Imp	RTI Str
NC	0.8	V-2	-	-	80	80	80
ALL	1.6	V-2	3	0	130	125	125
	3.2	V-2	2	0	130	130	130

Comparative Tracking Index (CTI): 0
Inclined Plane Tracking (IPT) kV: -
Dielectric Strength (kV/mm): -
Volume Resistivity (10^x ohm-cm): 16
High-Voltage Arc Tracking Rate (HVTR): 2
High Volt, Low Current Arc Resis (D495): 5
Dimensional Stability (%): -

(+) - May be replaced by one, two, or three numbers and/or letter(s)
(f2) - Subjected to one or more of the following tests: Ultraviolet Light, Water Exposure or Immersion in accordance with UL 746C, where the acceptability for outdoor use is to be determined by UL.

ANSI/UL 94 small-scale test data does not pertain to building materials, furnishings and related contents. ANSI/UL 94 small-scale test data is intended solely for determining the flammability of plastic materials used in the components and parts of end-product devices and appliances, where the acceptability of the combination is determined by UL.

Report Date: 2008-10-17
Last Revised: 2019-07-31

© 2019 UL LLC

IEC and ISO Test Methods

Test Name	Test Method	Units	Thk (mm)	Value
Flammability	IEC 60695-11-10	Class (color)	0.8	V-2 (NC)
			1.6	V-2 (ALL)
			3.2	V-2 (ALL)
Glow-Wire Flammability (GWFI)	IEC 60695-2-12	°C	1.6	850
			3.2	850
Glow-Wire Ignition (GWIT)	IEC 60695-2-13	°C	1.6	900
			3.2	875
IEC Comparative Tracking Index	IEC 60112	Volts (Max)	-	-
IEC Ball Pressure	IEC 60695-10-2	°C	-	-
ISO Heat Deflection (1.80 MPa)	ISO 75-2	°C	-	-
ISO Tensile Strength	ISO 527-2	MPa	-	-
ISO Flexural Strength	ISO 178	MPa	-	-
ISO Tensile Impact	ISO 8256	kJ/m^2	-	-
ISO Izod Impact	ISO 180	kJ/m^2	-	-
ISO Charpy Impact	ISO 179-2	kJ/m^2	-	-

CTK Co., Ltd.
(Ho-dong) 113, Yejik-ro, Cheoin-gu, Yongin-shi
Gyeonggi-do KOREA, REPUBLIC OF
Tel: +82-31-339-9970
Fax: +82-31-624-9501

Attachment 2 – Parts List

Component - Plastics E115797

Guide Information

LOTTE CHEMICAL CORPORATION

56 Gosan-ro, Uiwang-si Gyeonggi-do 437-711 KR

HN-1068(+)(f1)

Polycarbonate (PC) "INFINO", furnished as pellets

Color	Min. Thk (mm)	Flame Class	HWI	HAI	RTI Elec	RTI Imp	RTI Str
ALL	1.5	V-0	3	3	130	130	130
	3.0	V-0	-	-	130	130	130

Comparative Tracking Index (CTI): 3
Dielectric Strength (kV/mm): 31.8
High-Voltage Arc Tracking Rate (HVTR): -
Dimensional Stability (%): -
Inclined Plane Tracking (IPT) kV: -
Volume Resistivity (10^x ohm-cm): 17
Surface Resistivity (10^x ohm-cm): -
High Volt, Low Current Arc Resis (D495): -

(+) - May be replaced by one, two, or three numbers and/or letter(s)
(f1) - Suitable for outdoor use with respect to exposure to Ultraviolet Light, Water Exposure and Immersion in accordance with UL 746C.

ANSI/UL 94 small-scale test data does not pertain to building materials, furnishings and related contents. ANSI/UL 94 small-scale test data is intended solely for determining the flammability of plastic materials used in the components and parts of end-product devices and appliances, where the acceptability of the combination is determined by UL.

Report Date: 1998-08-24
Last Revised: 2019-08-27

© 2020 UL LLC

IEC and ISO Test Methods

Test Name	Test Method	Units	Thk (mm)	Value
Flammability	IEC 60695-11-10	Class (color)	1.5	V-0 (ALL)
			3.0	V-0 (ALL)
Glow-Wire Flammability (GWFI)	IEC 60695-2-12	°C	1.5	960
			3.0	960
Glow-Wire Ignition (GWIT)	IEC 60695-2-13	°C	1.5	825
			3.0	825
IEC Comparative Tracking Index	IEC 60112	Volts (Max)	-	-
IEC Ball Pressure	IEC 60695-10-2	°C	-	130
ISO Heat Deflection (1.80 MPa)	ISO 75-2	°C	-	-
ISO Tensile Strength	ISO 527-2	MPa	-	-
ISO Flexural Strength	ISO 178	MPa	-	-
ISO Tensile Impact	ISO 8256	kJ/m^2	-	-
ISO Izod Impact	ISO 180	kJ/m^2	-	-
ISO Charpy Impact	ISO 179-2	kJ/m^2	-	-

Component - Plastics E121254

[guide info]

SAMYANG CORPORATION

407 3-Ga Palbok-Dong, Cheonju Cheonbuk 560-200 KR

3025G-(y)

Polycarbonate (PC) "TRIREX", furnished as pellets

Color	Min Thk (mm)	Flame Class	HWI	HAI	RTI Elec	RTI Imp	RTI Str
ALL	1.5	V-0	2	0	130	125	130
	3.0	V-0	2	0	130	125	130
	6.0	V-0	1	0	130	125	130

Comparative Tracking Index (CTI): 3
Dielectric Strength (kV/mm): 31
High-Voltage Arc Tracking Rate (HVTR): 3
Dimensional Stability (%): 0
Inclined Plane Tracking (IPT): -
Volume Resistivity (10^x ohm-cm): 15
High Volt, Low Current Arc Resis (D495): 7

(y) - Represents any number 10-19 incl.
ANSI/UL 94 small-scale test data does not pertain to building materials, furnishings and related contents. ANSI/UL 94 small-scale test data is intended solely for determining the flammability of plastic materials used in the components and parts of end-product devices and appliances, where the acceptability of the combination is determined by UL.

Report Date: 1990-05-22
Last Revised: 2003-10-24

© 2017 UL LLC

IEC and ISO Test Methods

Test Name	Test Method	Units	Thk (mm)	Value
Flammability	IEC 60695-11-10	Class (color)	1.5	V-0 (ALL)
			3.0	V-0 (ALL)
			6.0	V-0 (ALL)
Glow-Wire Flammability (GWFI)	IEC 60695-2-12	°C	-	-
Glow-Wire Ignition (GWIT)	IEC 60695-2-13	°C	-	-
IEC Comparative Tracking Index	IEC 60112	Volts (Max)	-	-
IEC Ball Pressure	IEC 60695-10-2	°C	-	-
ISO Heat Deflection (1.80 MPa)	ISO 75-2	°C	-	-
ISO Tensile Strength	ISO 527-2	MPa	-	-
ISO Flexural Strength	ISO 178	MPa	-	-
ISO Tensile Impact	ISO 8256	kJ/m^2	-	-
ISO Izod Impact	ISO 180	kJ/m^2	-	-
ISO Charpy Impact	ISO 179-2	kJ/m^2	-	-

Attachment 3 – Photographs

<Photo 1 > Test Unit

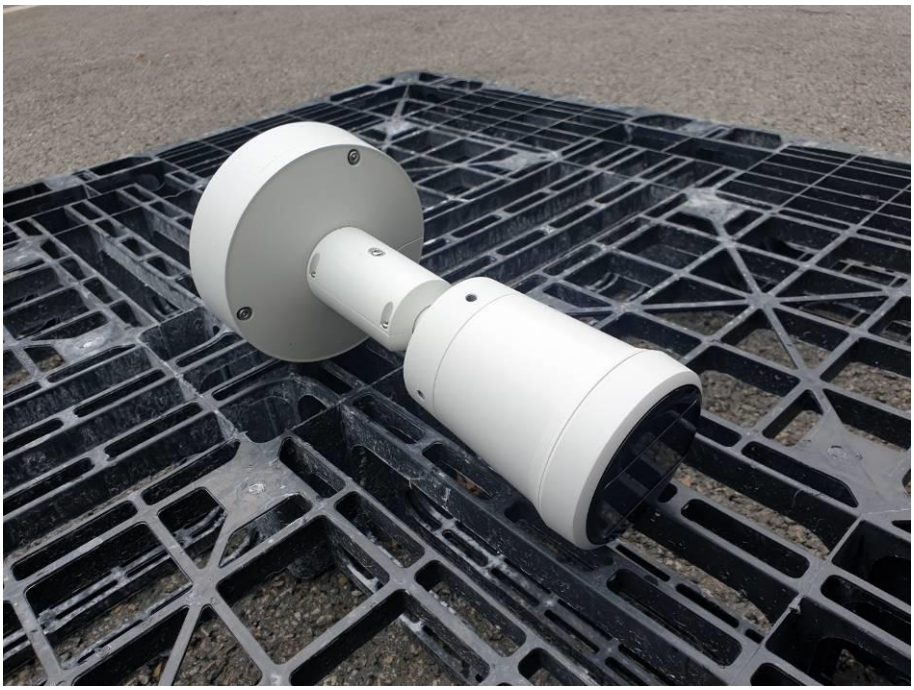

<Photo 2 >

Attachment 3 – Photographs

<Photo 3 > Hose down test

Attachment 3 – Photographs

<Photo 4 > Test Result

<Photo 5 >

Attachment 3 – Photographs

<Photo 6 > Test Result

<Photo 7 >

Attachment 3 – Photographs

<Photo 8 > Test Result

<Photo 9 >

Attachment 3 – Photographs

<Photo 10 > Test Result

<Photo 11 >

Attachment 3 – Photographs

<Photo 12 > Test Result
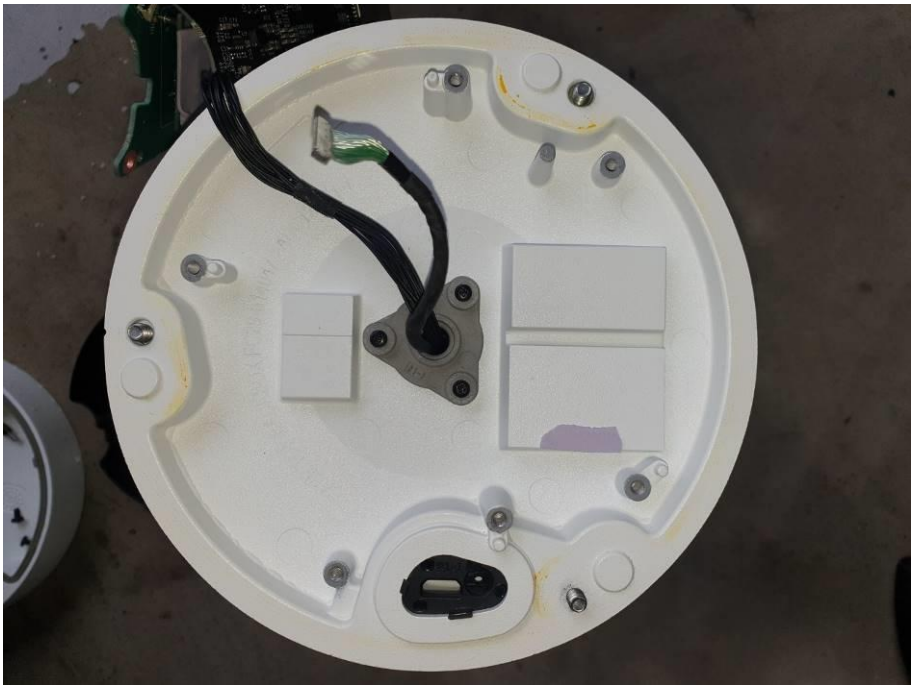
<Photo 13 >