

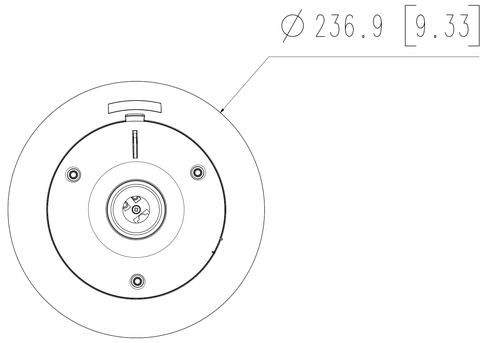

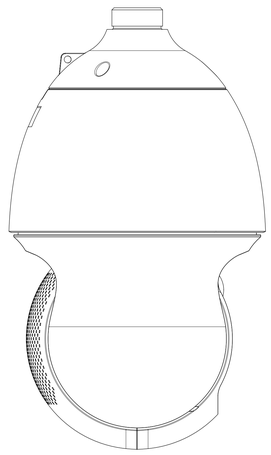

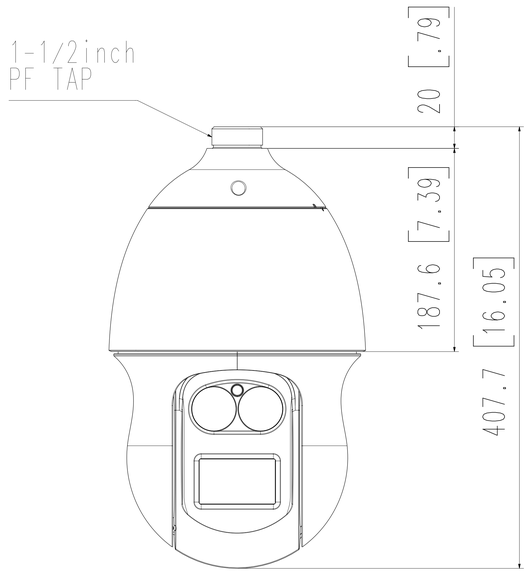

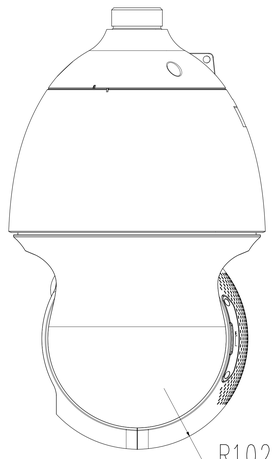

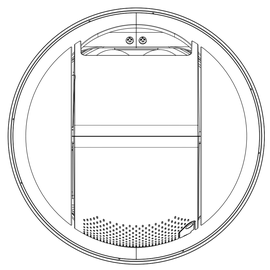

No.	MODEL NAME	DATE
3	XNP-6371RH(G)	'18.11.15
2	XNP-6370RH	'16.11.17
1	PNP-9200RH	'16.11.17

Unit:mm[inch]	SCALE:1/1	Hanwha Vision

A0

© Hanwha Vision Co.,Ltd. All rights reserved.