

Network Поворотные

XNP-8250R

6MP 25x IR PTZ Camera

Key Features

- Max. 6MP resolution
- 5~125mm (25x) optical zoom (digital 32x, total 800x zoom)
- Max. IR viewable length 200m (Wise IR)
- Day & Night (ICR), extreme WDR (120dB), DIS (Built-in gyro sensor)
- Intelligent Analytics, Object auto tracking (Person/Vehicle), Target lock tracking
- H.264, H.265, MJPEG codec, WiseStreamII
- IP66, IK10, NEMA4X, NEMA-TS 2 (2.2.8, 2.2.9)
- PTZ PLUS Design applied (Compact, Lighter, Simple cabling)
- SFP-supported by injector

Design and specifications are subject to change without notice. The latest product information / specification can be found at HanwhaVision.com
Hanwha Vision is formerly known as Hanwha Techwin.

© Hanwha Vision CO., LTD. All rights reserved.

XNP-8250R

6MP 25x IR PTZ Camera



Specifications

Video

Imaging Device	Size	1/2.8"
	Type	CMOS
Resolution		3328x1872, 3072x1728, 2688x1520, 2592x1944, 1920x1080, 1600x1200, 1280x1024, 1280x960, 1280x720, 1024x768, 800x600, 800x448, 720x576, 720x480, 640x480, 640x360, 320x240
Max. Framerate	H.265/H.264	30fps/25fps(60Hz/50Hz)
	MJPEG	30fps(@6MP Max. 5fps)
Min. Illumination (Lux)	Color(1/30sec, 30IRE)	0.1
	BW(1/30sec, 30IRE)	0.01

Lens

Focal Length (mm)		5~125
Zoom Ratio	Optical	25x
	Digital	32x
Max Aperture Ratio (F number)	Wide	1.6
	Tele	3.73
Angular Field of View	Horizontal	57.42°~2.71°
	Vertical	33.54°~1.55°
Min. Object Distance		5m(16.4ft)
Focus Control		Oneshot AF, Focus save
Lens Type		DC auto iris

Pan / Tilt / Rotate

Pan / Tilt / Rotate Range	Pan	360° Endless
	Tilt	90°~-20°
Pan Speed	Preset	Max. 700°/sec
	Manual	0.024°/sec~250°/sec
Tilt Speed	Preset	Max. 500°/sec
	Manual	0.024°/sec~250°/sec
Sequence		Preset(300ea), Swing, Group(6ea), Trace, Tour, Auto Run, Schedule

Design and specifications are subject to change without notice. The latest product information / specification can be found at HanwhaVision.com
Hanwha Vision is formerly known as Hanwha Techwin.

© Hanwha Vision CO., LTD. All rights reserved.

Pan / Tilt / Rotate

Preset Accuracy	Up to ±0.1°, Pan/Tilt correction

Operational

Direction Indicator		Support
Day & Night		Auto(ICR)
Backlight Compensation		BLC, HLC, WDR, SSDR
Wide Dynamic Range (dB)		120
Digital Noise Reduction		SSNR V
Digital Image Stabilization		Support(built-in gyro sensor)
Defog		Support
Motion Detection	Quantity	8ea
	Shape	8point Polygonal zones
Privacy Masking	Quantity	32ea
	Shape	4point Quadrangle zones
	Color / Option	Gray, Green, Red, Blue, Black, White, Mosaic
Gain Control		Low, Middle, High
White Balance		ATW, AWC, Manual, Indoor, Outdoor
Electronic Shutter	Mode	Minimum, Maximum, Anti flicker
	Speed Range	2~1/12,000sec
Video Rotation		Flip&Mirror
Alarm Interface	Others	Support alarm I/O via optional I/O box
Alarm Triggers		Analytics, Network disconnect, Alarm input
Alarm Events When Alarm Trigger Occurred		File upload(image): e-mail/FTP/SFTP, File upload(video clip): FTP/SFTP, Notification: e-mail, Recording: SD/SDHC/SDXC or NAS recording at event triggers,Alarm output, Handover: PTZ preset,send message by HTTP/HTTPS/TCP,Audio clip playback, MQTT: publication
Audio In		Support via optional I/O box
Audio Out		Support via optional I/O box
Light Type		IR LED
Light Viewable Length	IR	Wise IR 200m(656.17ft)
IR Wavelength		850nm
Water Removal		Support(Spin Dry, Lens heater)
Auto Tracking		Object auto tracking(Person/Vehicle), Target lock tracking

Analytics

Analytics Events	Normal	Motion detection, Tampering, Fog detection, Face detection, Audio detection, Sound classification, Shock detection, Virtual area(Lotering, Intrusion, Enter/Exit, Appear/Disappear), Virtual line(Crossing, Direction)

Design and specifications are subject to change without notice. The latest product information / specification can be found at HanwhaVision.com
Hanwha Vision is formerly known as Hanwha Techwin.

© Hanwha Vision CO., LTD. All rights reserved.

Network

Ethernet		Metal shielded RJ-45(10/100BASE-T)
Video Compression		H.265/H.264: Main/Baseline/High, MJPEG
Smart Codec		Manual, WiseStream II
Bitrate Control		H.265/H.264: CBR or VBR, MJPEG: VBR
Streaming	Unicast	Up to 20 users
	Multicast	Support
	Multiple Streaming	Up to 10 profiles
Protocol		IPv4, IPv6, TCP/IP, UDP/IP, RTP(UDP), RTP(TCP), RTCP, RTSP, NTP, HTTP, HTTPS, SSL/TLS, DHCP, FTP, SFTP, SMTP, ICMP, IGMPv2, SNMPv1/v2c/v3(MIB-2), ARP, DNS, DDNS, QoS, UPnP, Bonjour, LLDP, CDP, SRTP(TCP, UDP Unicast), MQTT, NTCIP 1205
Application Programming Interface	ONVIF	S, G, T
	Others	SUNAPI(HTTP API), Hanwha Vision Open Platform
Direct Cloud Connection		Support

Security

OS / Firmware Protect	Encrypted firmware, Secure boot, Signed firmware
User authentication	Digest authentication, Prevent brute-force attack
Network authentication	IEEE 802.1X(EAP-TLS, EAP-LEAP, EAP-PEAP, MSCHAPv2)
Secure Communication	HTTPS, WSS(WebSocket Secure), SRTP
Access Control	IP-based access control
Data Protect	Encryption credentials, Encrypt compress for live recording file export
Audit	Access / System / Event Log management
Device ID	Device certificate(Hanwha Vision Root CA)
Secure Storage	HTPM(Hanwha Trusted Platform Module), SDcard partition encrypt(AES-256)
Security Certificate	CyberSecurity assuarance program UL CAP(UL 2900-2-3 L2)

General

Memory	RAM	4GB
	Flash	512MB
Edge Storage	Micro SD/SDHC/SDXC	Max. 512GB x 2slot(Total 1TB)

Environmental & Electrical

Operating Condition	Temperature	-40°C~+55°C(-40°F~+131°F)
	Humidity	0~100% RH(condensing)
	Others	+74°C(+165°F)(Max) based on NEMA-TS 2(2.2.7), Start up should be done at above -30°C, Humidity control with AIR vent
Storage Condition	Temperature	-50°C~+60°C(-58°F~+140°F)
	Humidity	0~90% RH(non-condensing)
EPA(Effective Projected Area)		0.035㎡

Design and specifications are subject to change without notice. The latest product information / specification can be found at HanwhaVision.com
Hanwha Vision is formerly known as Hanwha Techwin.

© Hanwha Vision CO., LTD. All rights reserved.

Environmental & Electrical

Input Voltage		PoE++(IEEE802.3bt type3, Class6)
Power Consumption	PoE	Max. 40W, Typical 20W

Mechanical

Color	White, Black
Material	Aluminum, PC(Polycarbonate)
RAL Code	RAL9003, RAL9005
Product Dimensions	ø158x293.3mm(6.22x11.55")
Product Weight	3,200g(7.05lb)

DORI (EN62676-4 standard)

Detect (25PPM/ 8PPF)	Wide	121.5m(398.7ft)
	Tele	2813.9m(9232.1ft)
Observe (63PPM/ 19PPF)	Wide	48.6m(159.5ft)
	Tele	1125.6m(3692.8ft)
Recognize (125PPM/ 38PPF)	Wide	24.3m(79.7ft)
	Tele	562.8m(1846.4ft)
Identify (250PPM/ 76PPF)	Wide	12.2m(39.9ft)
	Tele	281.4m(923.2ft)

Design and specifications are subject to change without notice. The latest product information / specification can be found at HanwhaVision.com
Hanwha Vision is formerly known as Hanwha Techwin.

© Hanwha Vision CO., LTD. All rights reserved.

XNP-8250R

6MP 25x IR PTZ Camera



CAD

Unit: mm [inch]

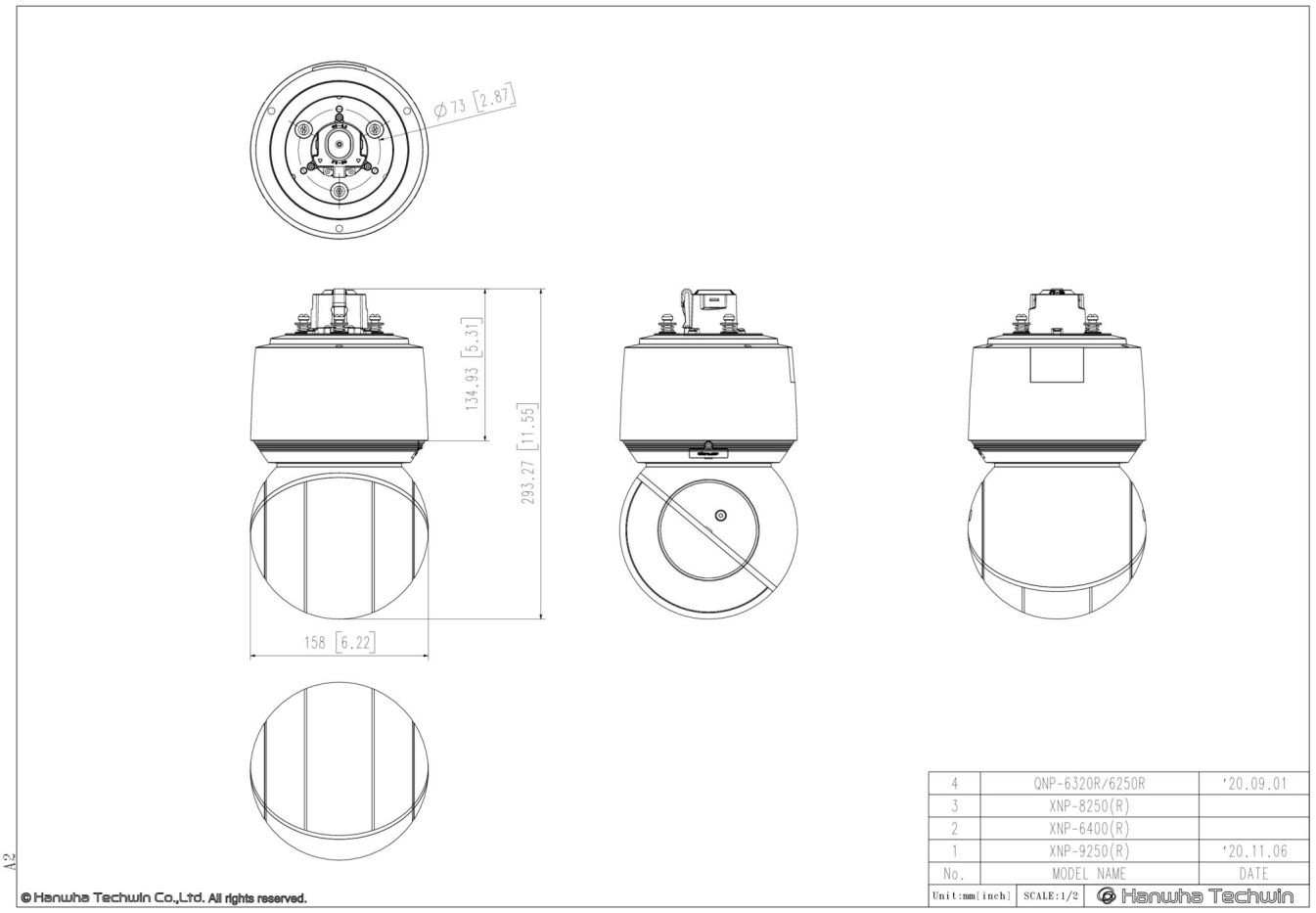

Design and specifications are subject to change without notice. The latest product information / specification can be found at HanwhaVision.com
Hanwha Vision is formerly known as Hanwha Techwin.

© Hanwha Vision CO., LTD. All rights reserved.

Compatible Devices


SBP-300LMW


SBP-156HMW


SBP-300WMW1


SPM-4210


SBP-300KMW


SBP-300BW


SBP-300PMW


SPB-PTZ85W


SBP-156WMW


SBP-300WMW

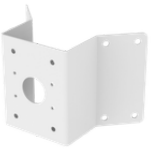
SBP-156KMW


SBP-156CMW


SBP-300CMW

Design and specifications are subject to change without notice. The latest product information / specification can be found at HanwhaVision.com
Hanwha Vision is formerly known as Hanwha Techwin.

© Hanwha Vision CO., LTD. All rights reserved.