

Network PTZ

XNP-A9314R

8MP 31x AI IR PTZ Camera

Key Features

- 8MP Image Resolution
- 31x Optical Zoom
- 90° ~ -20° Tilt Range
- 300m IR Length
- Dual NPU for AI-based Image enhancement
- Analytics events based on AI engine
- DPM(Dynamic Privacy Masking)
- Quick zoom, Wise auto focus(AI based), Focus scan
- IP66/IP67, NEMA4X, IK10, NEMA-TS 2
- Operating Temperature : -50°C~+55°C(-58°F~+131°F)

Design and specifications are subject to change without notice. The latest product information / specification can be found at HanwhaVision.com
Hanwha Vision is formerly known as Hanwha Techwin.

© Hanwha Vision CO., LTD. All rights reserved.

XNP-A9314R

8MP 31x AI IR PTZ Camera



Specifications

Video

Imaging Device	Size	1/1.8"
	Type	CMOS
Resolution		3840x2160, 3328x1872, 2592x1944, 2592x1464, 1920x1080, 1600x1200, 1280x1024, 1280x960, 1280x720, 1024x768, 800x600, 800x448, 720x576, 720x480, 640x480, 640x360, 320x240
Max. Framerate	H.265/H.264	30fps/25fps(60Hz/50Hz)
	MJPEG	30fps(@8MP Max. 5fps)
Min. Illumination (Lux)	Color(1/30sec, 30IRE)	0.06
	BW(1/30sec, 30IRE)	0.006

Lens

Focal Length (mm)		6.91 ~ 214.7
Zoom Ratio	Optical	31x (Support Quick Zoom)
	Digital	32x
Max Aperture Ratio (F number)	Wide	1.36
	Tele	4.6
Angular Field of View	Horizontal	60.6°~2.59°
	Vertical	35.1°~1.45°
	Diagonal	68.8°~2.97°
Min. Object Distance		3m(9.84ft)
Focus Control		Auto, Manual, Oneshot AF, Focus save, Focus scan, Wise auto focus
Lens Type		P iris(IR corrected)

Pan / Tilt / Rotate

Pan / Tilt / Rotate Range	Pan	360° Endless
	Tilt	110° (90° ~ -20°)
Pan Speed	Preset	Max. 550°/sec
	Manual	0.024°/sec~200°/sec
Tilt Speed	Preset	Max. 550°/sec
	Manual	0.024°/sec~200°/sec

Design and specifications are subject to change without notice. The latest product information / specification can be found at HanwhaVision.com
Hanwha Vision is formerly known as Hanwha Techwin.

© Hanwha Vision CO., LTD. All rights reserved.

Pan / Tilt / Rotate

Sequence	Preset(300ea), Swing, Group(6ea), Trace, Tour, Auto Run, Schedule, Home Position
Preset Accuracy	±0.05°

Operational

Direction Indicator		Support
Day & Night		Auto(ICR)
Backlight Compensation		BLC, HLC, WDR, SSDR
Wide Dynamic Range (dB)		120
Digital Noise Reduction		WiseNR II (Based on AI engine), SSNR V
Digital Image Stabilization		Support(built-in gyro sensor)
Defog		Support
Motion Detection	Quantity	8ea
	Shape	8point Polygonal zones
Privacy Masking	Quantity	32ea
	Shape	4point Quadrangle zones
	Color / Option	Gray, Green, Red, Blue, Black, White, Mosaic
	Dynamic Privacy Masking: Color / Option	Gray, Green, Red, Blue, Black, White, Mosaic, Purple, Yellow
Gain Control		Off, Max gain, Manual
White Balance		ATW, NarrowATW, AWC, Manual, Indoor, Outdoor, Mercury, Sodium
Electronic Shutter	Mode	Minimum, Maximum, Anti flicker, Prefer shutter control(Based on AI engine), Prefer shutter control
	Speed Range	2~1/30,000sec
Video Rotation		Flip&Mirror
Alarm Interface	Others	Support alarm I/O via optional I/O box
Alarm Triggers		Analytics, Network disconnect, Alarm input, App event, Time schedule, MQTT subscription, Day/Night, Storage disruption
Alarm Events When Alarm Trigger Occurred		File upload(image): e-mail/FTP/SFTP, File upload(video clip): FTP/SFTP, Notification: e-mail, Recording: SD/SDHC/SDXC or NAS recording at event triggers,Alarm output, Handover: PTZ preset,send message by HTTP/HTTPS/TCP,Audio clip playback, MQTT: publication,NAS recording at event triggers
Audio In		Support via optional I/O box
Audio Out		Support via optional I/O box
Light Type		IR LED
Light Viewable Length	IR	Wise IR 300m(984.25ft)
IR Wavelength		850nm
Water Removal		Support(Spin Dry, Lens heater)
Auto Tracking		Support, Object auto tracking(Person/Vehicle), Target lock tracking

© Hanwha Vision CO., LTD. All rights reserved.

Analytics

Classified Object Type		Person, Face, Vehicle, License plate
Attributes	Person	Upper/Lower clothes color, Gender, Bag
	Vehicle	Type(car, bus, truck, motorcycle, bicycle), Color
	Face	Age, Gender, Face mask, Glasses
Similarity Search		Support
Thumbnail		BestShot
Analytics Events	Based on AI Engine	Object detection, Virtual line(Crossing/Direction), Motion detection, Slip & fall detection, Virtual area(Loitering/Intrusion/Enter/Exit/Appear/Disappear), Auto tracking
	Normal	Motion detection, Tampering, Audio detection, Shock detection

Network

Ethernet		Metal shielded RJ-45(10/100BASE-T)
Video Compression		H.265: Main, H.264: Main/Baseline/High,MJPEG
Smart Codec		WiseStream(Based on AI engine)
Bitrate Control		H.265/H.264: CBR or VBR, MJPEG: VBR
Streaming	Unicast	Up to 20 users
	Multicast	Support
	Multiple Streaming	Up to 10 profiles
Protocol		IPv4, IPv6, TCP/IP, UDP/IP, RTP(UDP), RTP(TCP), RTCP, RTSP, NTP, HTTP, HTTPS, SSL/TLS, DHCP, FTP, SFTP, SMTP, ICMP, IGMPv1/v2/v3, SNMPv1/v2c/v3(MIB-2), ARP, DNS, DDNS, QoS, UPnP, Bonjour, LLDP, CDP, SRTP(TCP, UDP Unicast), MQTT, NTCIP 1205
Application Programming Interface	ONVIF	S, G, T, M
	Others	SUNAPI(HTTP API), Hanwha Vision Open Platform
Direct Cloud Connection		Support

Security

OS / Firmware Protect	Encrypted firmware, Secure boot, Signed firmware
User authentication	Digest authentication, Prevent brute-force attack
Network authentication	IEEE 802.1X(EAP-TLS, EAP-LEAP, EAP-PEAP, MSCHAPv2)
Secure Communication	HTTPS, WSS(WebSocket Secure), SRTP
Access Control	IP-based access control, MAC-based access control, Auto logout
Data Protect	Encryption credentials, Encrypt compress for live recording file export
Audit	Access / System / Event Log management
Device ID	Device certificate(Hanwha Vision Root CA)
Secure Storage	SDcard partition encrypt(AES-256), Secure element
Supply Chain Security	SBOM
Security Certificate	Secure element(FIPS 140-3 level3, CC EAL6+), Consumer IoT Security Standard (ETSI EN 303 645)

Design and specifications are subject to change without notice. The latest product information / specification can be found at HanwhaVision.com
Hanwha Vision is formerly known as Hanwha Techwin.

© Hanwha Vision CO., LTD. All rights reserved.

General

SoC	Type	Wisenet 9
	Dual NPU	Support
Memory	RAM	4GB
	Flash	8GB eMMC
Edge Storage	Micro SD/SDHC/SDXC	Max. 1TB x 2slot(Total 2TB)

Environmental & Electrical

Operating Condition	Temperature	-50°C~+55°C(-58°F~+131°F)
	Humidity	0~100% RH(condensing)
	Others	+74°C(+165°F)(Max) based on NEMA-TS 2(2.2.7), Start up should be done at above -30°C, Humidity control with AIR vent, Built-in heater
Storage Condition	Temperature	-50°C~+60°C(-58°F~+140°F)
	Humidity	0~90% RH(non-condensing)
Input Voltage		PoE++(IEEE802.3bt type3, Class6)
Power Consumption	PoE	PoE : Max 51.0W, typical 32.5W

Mechanical

Color	White, Black
Material	Aluminum, PC(Polycarbonate), Hard-coated dome
RAL Code	RAL9003, RAL9005
Product Dimensions	ø188x264.9mm(7.40x10.47")
Product Weight	4570g (10.08lb)

Certifications & Standards

EMC	FCC 47 CFR 15 Subpart B Class A, ICES-3(A)/NMB-3(A), CE/UKCA - EN55032 Class A, EN 50130-4, EN 61000-3-2, EN 61000-3-3, VCCI CISPR 32 Class A, RCM AS-NZS CISPR 32 Class A, KS C 9832 Class A, KS C 9835
Safety	UL 62368-1, CAN/CSA C22.2 NO. 62368-1, IEC 62471
Environment	IEC/EN 63000, IEC 60529 IP66, IEC 60529 IP67, IEC 62262 IK10, NEMA TS 2-2013 (2.2.7, 2.2.8, 2.2.9), NEMA 250 type 4X

DORI (EN62676-4 standard)

Detect (25PPM/ 8PPF)	Wide	131.4m(431.19ft)
	Tele	3397.3m(11146.16ft)
Observe (63PPM/ 19PPF)	Wide	52.6m(172.48ft)
	Tele	1358.9m(4458.46ft)
Recognize (125PPM/ 38PPF)	Wide	26.3m(86.24ft)
	Tele	679.5m(2229.23ft)
Identify (250PPM/ 76PPF)	Wide	13.1m(43.12ft)
	Tele	339.7m(1114.62ft)

Design and specifications are subject to change without notice. The latest product information / specification can be found at HanwhaVision.com
Hanwha Vision is formerly known as Hanwha Techwin.

© Hanwha Vision CO., LTD. All rights reserved.

XNP-A9314R

8MP 31x AI IR PTZ Camera



CAD

Unit: mm [inch]

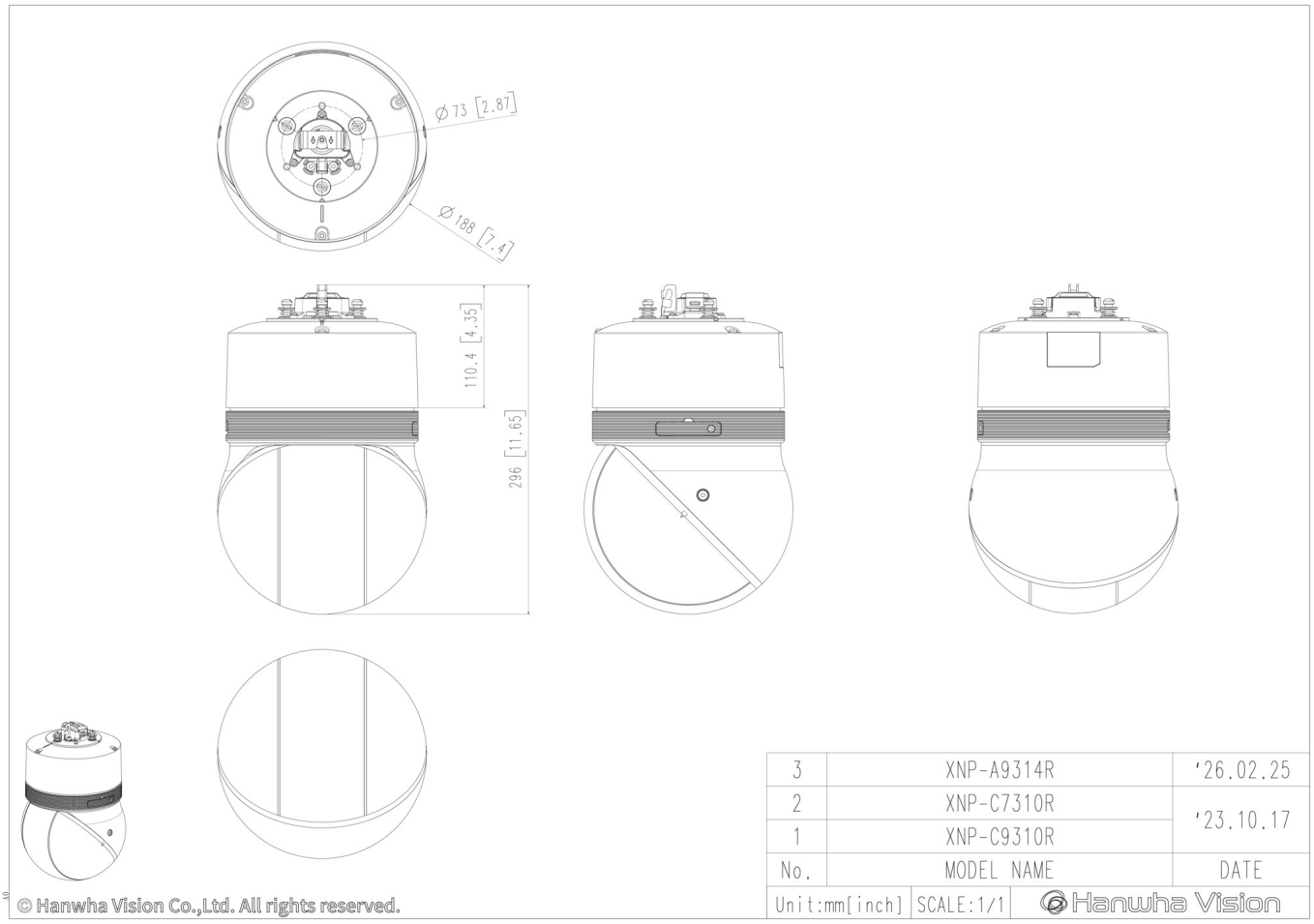

Design and specifications are subject to change without notice. The latest product information / specification can be found at HanwhaVision.com
Hanwha Vision is formerly known as Hanwha Techwin.

© Hanwha Vision CO., LTD. All rights reserved.

Compatible Devices



SBP-156HMW



SBP-140CMB



SBP-180CMB



SBP-180CMS



SBP-150CMP

SBP-300CMP

SBP-900CMP



SBP-C15NPH

SBP-C15H



SBP-C15NP



SBP-C35H



SBP-C15P



SBP-150CMI



SBP-300CMI



SBP-300CMW1



SBP-900CMW



SBP-300CMTS



SBP-300CMTW



SBP-200WMW



SBP-350WMW



SBP-156WMW



SBP-250WMW



SBP-400WMW



SBP-115PA



SBP-150PMW



SBP-156KMW



SBP-050NBW



SBP-150NBW



SBP-156LMW1



SBP-060S



SBP-150S



SPM-4210

Design and specifications are subject to change without notice. The latest product information / specification can be found at HanwhaVision.com
Hanwha Vision is formerly known as Hanwha Techwin.

© Hanwha Vision CO., LTD. All rights reserved.