

Network PTZ

XNP-A9314R

8MP 31x AI IR PTZ カメラ

Key Features

- 8MP Image Resolution
- 31x Optical Zoom
- 90° ~ -20° Tilt Range
- 300m IR Length
- AIベースの画像強化のためのデュアルNPU
- AIエンジンに基づく分析イベント
- DPM (動的プライバシーマスキング)
- クイックズーム、Wiseオートフォーカス (AIベース)、フォーカススキャン
- IP66/IP67、NEMA4X、IK10、NEMA-TS 2

Design and specifications are subject to change without notice. The latest product information / specification can be found at HanwhaVision.com
Hanwha Vision is formerly known as Hanwha Techwin.

© Hanwha Vision CO., LTD. All rights reserved.

XNP-A9314R

8MP 31x AI IR PTZ カメラ



Specifications

映像

Imaging Device	サイズ	1/1.8"
	タイプ	CMOS
解像度		3840x2160, 3328x1872, 2592x1944, 2592x1464, 1920x1080, 1600x1200, 1280x1024, 1280x960, 1280x720, 1024x768, 800x600, 800x448, 720x576, 720x480, 640x480, 640x360, 320x240
Max. Framerate	H.265/H.264	30fps/25fps(60Hz/50Hz)
	MJPEG	30fps(@8MP Max. 5fps)
Min. Illumination (Lux)	Color(1/30sec, 30IRE)	0.06
	BW(1/30sec, 30IRE)	0.006

レンズ

Focal Length (mm)		6.91 ~ 214.7
Zoom Ratio	Optical	31x (Support Quick Zoom)
	Digital	32x
Max Aperture Ratio (F number)	Wide	1.36
	Tele	4.6
視野角度	Horizontal	60.6°~2.59°
	Vertical	35.1°~1.45°
	Diagonal	68.8°~2.97°
Min. Object Distance		3m(9.84ft)
Focus Control		自動, 手動, Oneshot AF, フォーカス保存, フォーカススキャン, Wiseオートフォーカス
Lens Type		P iris(IR corrected)

Pan / Tilt / Rotate

Pan / Tilt / Rotate Range	Pan	360° Endless
	Tilt	110° (90° ~ -20°)
Pan Speed	プリセット	Max. 550°/sec
	手動	0.024°/sec~200°/sec
Tilt Speed	プリセット	Max. 550°/sec
	手動	0.024°/sec~200°/sec

Design and specifications are subject to change without notice. The latest product information / specification can be found at HanwhaVision.com
Hanwha Vision is formerly known as Hanwha Techwin.

© Hanwha Vision CO., LTD. All rights reserved.

Pan / Tilt / Rotate

シーケンス	Preset(300ea), スイング, Group(6ea), 追跡, ツアー, オートラン, スケジュール, Home Position
Preset Accuracy	±0.05°

技能

方向インジケーター		サポート
Day & Night		Auto(ICR)
Backlight Compensation		BLC, HLC , WDR, SSDR
Wide Dynamic Range (dB)		120
Digital Noise Reduction		WiseNR II (Based on AI engine), SSNR V
Digital Image Stabilization		Support(built-in gyro sensor)
曇り除去		サポート
モーション検知	Quantity	8ea
	Shape	8point Polygonal zones
Privacy Masking	Quantity	32ea
	Shape	4point Quadrangle zones
	Color / Option	灰色, 緑, Red, 青, 黒, 白, モザイク
	Dynamic Privacy Masking: Color / Option	灰色, 緑, Red, 青, 黒, 白, モザイク, 紫色, 黄色
ゲイン制御		オフ, 最大ゲイン, 手動
ホワイトバランス		ATW, NarrowATW, AWC, 手動, 室内, 屋外, Mercury, Sodium
Electronic Shutter	モード	最小, 最大, アンチフリッカー, Prefer shutter control(Based on AI engine), Prefer shutter control
	Speed Range	2~1/30,000sec
ビデオ回転		Flip&Mirror
Alarm Interface	その他	Support alarm I/O via optional I/O box
Alarm Triggers		分析, ネットワーク切断, アラーム入力, アプリケーションイベント, タイムスケジュール, MQTT購読, デイ/ナイト, ストレージデバイスの停止
Alarm Events When Alarm Trigger Occurred		File upload(image): e-mail/FTP/SFTP, File upload(video clip): FTP/SFTP, Notification: e-mail, Recording: SD/SDHC/SDXC or NAS recording at event triggers,アラーム出力, Handover: PTZ preset,send message by HTTP/HTTPS/TCP,Audio clip playback, MQTT: publication,NAS recording at event triggers
オーディオ入力		オプションの I/O ボックスでサポート
オーディオ出力		オプションの I/O ボックスでサポート
Light Type		IR LED
Light Viewable Length	IR	Wise IR 300m(984.25ft)
IR Wavelength		850nm
Water Removal		Support(Spin Dry, Lens heater)
自動トラッキング		サポート, Object auto tracking(Person/Vehicle), Target lock tracking

Design and specifications are subject to change without notice. The latest product information / specification can be found at HanwhaVision.com
Hanwha Vision is formerly known as Hanwha Techwin.

© Hanwha Vision CO., LTD. All rights reserved.

分析

Classified Object Type		人, 顔, 車両, ナンバープレート
属性	人	Upper/Lower clothes color, 性別, カバン
	車両	Type(car, bus, truck, motorcycle, bicycle), カラー
	顔	年齢, 性別, 顔マスク, メガネ
Similarity Search		Support
サムネイル		ベストショット
分析イベント	Based on AI Engine	対象物検知, 仮想線（交差·方向）, モーション検知, 転倒検知, 仮想領域（ローターリング、侵入、Enter、Exit、Appear、Disappear）, Auto tracking
	通常	モーション検知, タンパリング, 音声検出, 衝撃検知

ネットワーク

Ethernet		Metal shielded RJ-45(10/100BASE-T)
映像圧縮		H.265/H.264: Main/Baseline/High, MJPEG
Smart codec		WiseStream(Based on AI engine)
ビットレートコントロール		H.265/H.264: CBR or VBR, MJPEG: VBR
Streaming	Unicast	最大 20ユーザー
	マルチキャスト	サポート
	Multiple Streaming	最大 10プロファイル
プロトコル		IPv4, IPv6, TCP/IP, UDP/IP, RTP(UDP), RTP(TCP), RTCP, RTSP, NTP, HTTP, HTTPS, SSL/TLS, DHCP, FTP, SFTP, SMTP, ICMP, IGMP, SNMPv1/v2c/v3(MIB-2), ARP, DNS, DDNS, QoS, UPnP, Bonjour, LLDP, CDP, SRTP(TCP, UDP Unicast), MQTT, NTCIP 1205
Application Programming Interface	ONVIF	s, G, T, M
	その他	SUNAPI(HTTP API), Hanwha Vision Open Platform
Direct Cloud Connection		サポート

セキュリティ

OS / Firmware Protect	Encrypted firmware, Secure boot, Signed firmware
ユーザー認証	ダイジェスト認証, Prevent brute-force attack
Network authentication	IEEE 802.1X(EAP-TLS, EAP-LEAP, EAP-PEAP, MSCHAPv2)
Secure Communication	HTTPS, WSS(WebSocket Secure), SRTP
Access Control	IP-based access control, MAC-based access control, 自動ログアウト
Data Protect	Encryption credentials, Encrypt compress for live recording file export
Audit	Access / System / Event Log management
デバイスID	Device certificate(Hanwha Vision Root CA)
Secure Storage	SDcard partition encrypt(AES-256), Secure element
Supply Chain Security	SBOM
Security Certificate	Secure element(FIPS 140-3 level3, CC EAL6+), ETSI EN 303 645

Design and specifications are subject to change without notice. The latest product information / specification can be found at HanwhaVision.com
Hanwha Vision is formerly known as Hanwha Techwin.

© Hanwha Vision CO., LTD. All rights reserved.

一般

SoC	Type	Wisenet 9
	Dual NPU	Support
メモリ	RAM	4GB
	フラッシュ	8GB eMMC
Edge Storage	Micro SD/SDHC/SDXC	Max. 1TB x 2slot(Total 2TB)

Environmental & Electrical

動作条件	温度	-50°C~+55°C(-58°F~+131°F)
	湿度	0~100% RH(condensing)
	その他	+74°C(+165°F)(Max) based on NEMA-TS 2(2.2.7), Start up should be done at above -30°C, Humidity control with AIR vent, Built-in heater
保管条件	温度	-50°C~+60°C(-58°F~+140°F)
	湿度	0~90% RH(non-condensing)
Input Voltage		PoE++(IEEE802.3bt type3, Class6)
消費電力	PoE	PoE : Max 51.0W, typical 32.5W

Mechanical

カラー	白, 黒
材料	アルミニウム, PC(Polycarbonate), Hard-coated dome
RAL Code	RAL9003, RAL9005
Product Dimensions	ø188x264.9mm(7.40x10.47")
Product Weight	4570g (10.08lb)

Certifications & Standards

EMC	FCC 47 CFR 15 Subpart B Class A, ICES-3(A)/NMB-3(A), CE/UKCA - EN55032 Class A, EN 50130-4, EN 61000-3-2, EN 61000-3-3, VCCI CISPR 32 Class A, RCM AS-NZS CISPR 32 Class A, KS C 9832 Class A, KS C 9835
Safety	UL 62368-1, CAN/CSA C22.2 NO. 62368-1, IEC 62471
環境	IEC/EN 63000, IEC 60529 IP66, IEC 60529 IP67, IEC 62262 IK10, NEMA TS 2-2013 (2.2.7, 2.2.8, 2.2.9), NEMA 250 type 4X

DORI (EN62676-4 standard)

Detect (25PPM/ 8PPF)	Wide	131.4m(431.19ft)
	Tele	3397.3m(11146.16ft)
Observe (63PPM/ 19PPF)	Wide	52.6m(172.48ft)
	Tele	1358.9m(4458.46ft)
Recognize (125PPM/ 38PPF)	Wide	26.3m(86.24ft)
	Tele	679.5m(2229.23ft)
Identify (250PPM/ 76PPF)	Wide	13.1m(43.12ft)
	Tele	339.7m(1114.62ft)

Design and specifications are subject to change without notice. The latest product information / specification can be found at HanwhaVision.com
Hanwha Vision is formerly known as Hanwha Techwin.

© Hanwha Vision CO., LTD. All rights reserved.

XNP-A9314R

8MP 31x AI IR PTZ カメラ



CAD

Unit: mm [inch]

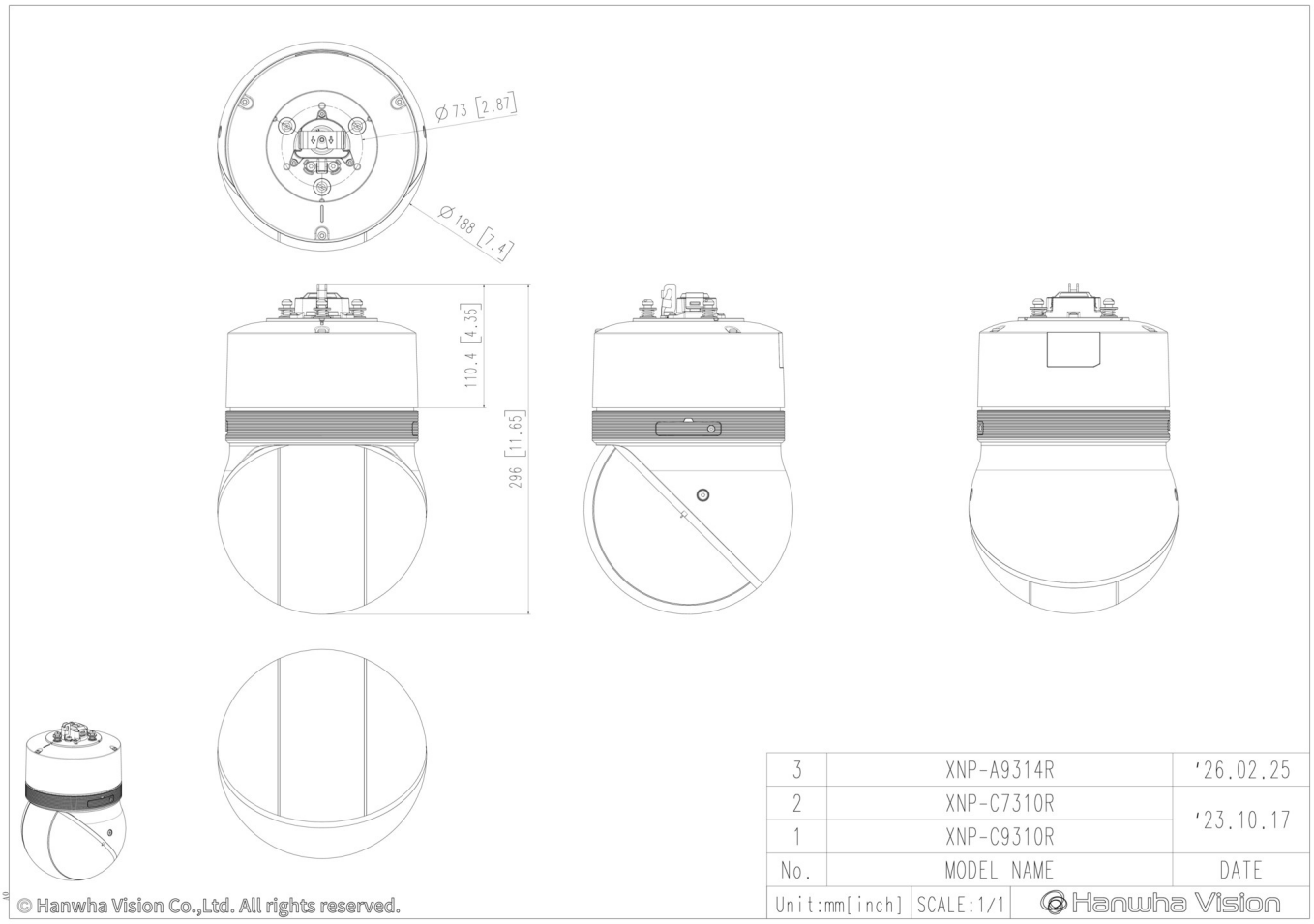

3	XNP-A9314R	'26.02.25
2	XNP-C7310R	'23.10.17
1	XNP-C9310R	
No.	MODEL NAME	DATE
Unit:mm[inch]	SCALE:1/1	Hanwha Vision

© Hanwha Vision Co.,Ltd. All rights reserved.

Design and specifications are subject to change without notice. The latest product information / specification can be found at HanwhaVision.com
Hanwha Vision is formerly known as Hanwha Techwin.

© Hanwha Vision CO., LTD. All rights reserved.

Compatible Devices



SBP-156HMW



SBP-140CMB



SBP-180CMB



SBP-180CMS



SBP-150CMP

SBP-300CMP

SBP-900CMP



SBP-C15NPH

SBP-C15H



SBP-C15NP



SBP-C35H



SBP-C15P



SBP-150CMI



SBP-300CMI



SBP-300CMW1



SBP-900CMW



SBP-300CMTS



SBP-300CMTW



SBP-200WMW



SBP-350WMW



SBP-156WMW



SBP-250WMW



SBP-400WMW



SBP-115PA



SBP-150PMW



SBP-156KMW



SBP-050NBW



SBP-150NBW



SBP-156LMW1



SBP-060S



SBP-150S



SPM-4210

Design and specifications are subject to change without notice. The latest product information / specification can be found at HanwhaVision.com
Hanwha Vision is formerly known as Hanwha Techwin.

© Hanwha Vision CO., LTD. All rights reserved.