

Network PTZ

XNP-C6403R

2MP 40x AI IR PTZ カメラ

Key Features

- 最大2MPの解像度
- 4.25~170mm(40x) ズーム(デジタル 32x、トータル 1280x ズーム)
- デイナイト(ICR)、エクストリームWDR、DIS (内蔵ジャイロセンサー)
- インテリジェント分析、オブジェクトオートトラッキング (人/車両)、ターゲットロックトラッキング
- H.264、H.265、MJPEG、WiseStream II対応
- IP66、IK10、NEMA4X、NEMA-TS 2 (2.2.8、2.2.9)
- PTZ PLUSデザインの適用 (コンパクト、軽量、シンプルなケーブル接続)

Design and specifications are subject to change without notice. The latest product information / specification can be found at HanwhaVision.com
Hanwha Vision is formerly known as Hanwha Techwin.

© Hanwha Vision CO., LTD. All rights reserved.

XNP-C6403R

2MP 40x AI IR PTZ カメラ



Specifications

映像

Imaging Device	サイズ	1/2.8"
	タイプ	CMOS
解像度		1920x1080, 1280x1024, 1280x960, 1280x720, 1024x768, 800x600, 800x448, 720x576, 720x480, 640x480, 640x360, 320x240
Max. Framerate	H.265/H.264	60fps/50fps(60Hz/50Hz)
	MJPEG	30fps
Min. Illumination (Lux)	Color(1/30sec, 30IRE)	0.05
	BW(1/30sec, 30IRE)	0.005, 0 (IR LED On)

レンズ

Focal Length (mm)		4.25~170
Zoom Ratio	Optical	40x
	Digital	32x
Max Aperture Ratio (F number)	Wide	1.6
	Tele	4.95
視野角度	Horizontal	65.66°~1.88°
	Vertical	39.4°~1.09°
Min. Object Distance		5m(16.4ft)
Focus Control		Oneshot AF, フォーカス保存
Lens Type		DC auto iris

Pan / Tilt / Rotate

Pan / Tilt / Rotate Range	Pan	360° Endless
	Tilt	90°~-20°
Pan Speed	プリセット	Max. 700°/sec
	手動	0.024°/sec~250°/sec
Tilt Speed	プリセット	Max. 500°/sec
	手動	0.024°/sec~250°/sec
シーケンス		Preset(300ea), スイング, Group(6ea), 追跡, ツアー, オートラン, スケジュール
Preset Accuracy		Up to ±0.1°, Pan/Tilt correction

Design and specifications are subject to change without notice. The latest product information / specification can be found at HanwhaVision.com
Hanwha Vision is formerly known as Hanwha Techwin.

© Hanwha Vision CO., LTD. All rights reserved.

技能

方向インジケーター		サポート
Day & Night		Auto(ICR)
Backlight Compensation		BLC, HLC , WDR, SSDR
Wide Dynamic Range (dB)		150
Digital Noise Reduction		WiseNR II (Based on AI engine), SSNR V
Digital Image Stabilization		Support(built-in gyro sensor)
曇り除去		サポート
モーション検知	Quantity	8ea
	Shape	8point Polygonal zones
Privacy Masking	Quantity	32ea
	Shape	4point Quadrangle zones
	Color / Option	灰色, 緑, Red, 青, 黒, 白, モザイク
ゲイン制御		オフ, 最大ゲイン, 手動
ホワイトバランス		ATW, NarrowATW, AWC, 手動, 室内, 屋外, Mercury, Sodium
Electronic Shutter	モード	最小, 最大, アンチフリッカー, Prefer shutter control(Based on AI engine)
	Speed Range	2~1/12,000sec
ビデオ回転		Flip&Mirror
Alarm Interface	その他	Support alarm I/O via optional I/O box
Alarm Triggers		分析, ネットワーク切断, アラーム入力, タイムスケジュール, MQTT購読
Alarm Events When Alarm Trigger Occurred		File upload(image): e-mail/FTP/SFTP, File upload(video clip): FTP/SFTP, Notification: e-mail, Recording: SD/SDHC/SDXC or NAS recording at event triggers,アラーム出力, Handover: PTZ preset,send message by HTTP/HTTPS/TCP,Audio clip playback, MQTT: publication
オーディオ入力		オプションの I/O ボックスでサポート
オーディオ出力		オプションの I/O ボックスでサポート
Light Type		IR LED
Light Viewable Length	IR	WiseIR 200m(656.17ft)
IR Wavelength		850nm
Water Removal		Support(Spin Dry, Lens heater)
自動トラッキング		サポート, Object auto tracking(Person/Vehicle), Target lock tracking

分析

Classified Object Type		人, 顔, 車両, ナンバープレート
属性	車両	Type(car, bus, truck, motorcycle, bicycle)
サムネイル		DetectionShot

Design and specifications are subject to change without notice. The latest product information / specification can be found at HanwhaVision.com
Hanwha Vision is formerly known as Hanwha Techwin.

© Hanwha Vision CO., LTD. All rights reserved.

分析

分析イベント	Based on AI Engine	対象物検知, 仮想線 (交差·方向) , 仮想領域 (ローターリング、侵入、Enter、Exit) , モーション検知
	通常	タンパリング, フォグ検出, 音声検出, サウンド分類, 衝撃検知, Virtual area(Appear/Disappear)

ネットワーク

Ethernet		Metal shielded RJ-45(10/100BASE-T)
映像圧縮		H.265/H.264: Main/Baseline/High, MJPEG
Smart codec		手動, WiseStreamIII
ビットレートコントロール		H.265/H.264: CBR or VBR, MJPEG: VBR
Streaming	Unicast	最大 20ユーザー
	マルチキャスト	サポート
	Multiple Streaming	最大 10プロファイル
プロトコル		IPv4, IPv6, TCP/IP, UDP/IP, RTP(UDP), RTP(TCP), RTCP, RTSP, NTP, HTTP, HTTPS, SSL/TLS, DHCP, FTP, SFTP, SMTP, ICMP, IGMP, SNMPv1/v2c/v3(MIB-2), ARP, DNS, DDNS, QoS, UPnP, Bonjour, LLDP, CDP, SRTP(TCP, UDP Unicast), MQTT, NTCIP 1205
Application Programming Interface	ONVIF	s, G, T, M
	その他	SUNAPI(HTTP API), Hanwha Vision Open Platform
Direct Cloud Connection		サポート

セキュリティ

OS / Firmware Protect	Encrypted firmware, Secure boot, Signed firmware
ユーザー認証	ダイジェスト認証, Prevent brute-force attack
Network authentication	IEEE 802.1X(EAP-TLS, EAP-LEAP, EAP-PEAP, MSCHAPv2)
Secure Communication	HTTPS, WSS(WebSocket Secure), SRTP
Access Control	IP-based access control
Data Protect	Encryption credentials, Encrypt compress for live recording file export
Audit	Access / System / Event Log management
デバイスID	Device certificate(Hanwha Vision Root CA)
Secure Storage	TPM(Trusted platform module), HTPM(Hanwha Trusted Platform Module), SDcard partition encrypt(AES-256)
Security Certificate	TPM 2.0 with FIPS 140-2 level2

一般

メモリ	RAM	4GB
	フラッシュ	512MB
Edge Storage	Micro SD/SDHC/SDXC	Max. 512GB x 2slot(Total 1TB)

Design and specifications are subject to change without notice. The latest product information / specification can be found at HanwhaVision.com
Hanwha Vision is formerly known as Hanwha Techwin.

© Hanwha Vision CO., LTD. All rights reserved.

Environmental & Electrical

動作条件	温度	-40°C~+50°C(-40°F~+122°F)
	湿度	0~100% RH(condensing)
	その他	+74°C(+165°F)(Max) based on NEMA-TS 2(2.2.7), Start up should be done at above -30°C, Humidity control with AIR vent
保管条件	温度	-50°C~+60°C(-58°F~+140°F)
	湿度	0~90% RH(non-condensing)
Wind Load		241km/h(150mph)
EPA(Effective Projected Area)		0.035㎡
Input Voltage		PoE++(IEEE802.3bt type3, Class6)
消費電力	PoE	Max. 40W, Typical 24W

Mechanical

カラー	白, 黒
材料	アルミニウム, PC(Polycarbonate), Hard-coated dome
RAL Code	RAL9003, RAL9005
Product Dimensions	ø158x293.3mm(6.22x11.55")
Product Weight	3,200g(7.05lb)

Certifications & Standards

EMC	FCC 47 CFR 15 Subpart B Class A, ICES-3(A)/NMB-3(A), CE/UKCA - EN55032 Class A, EN 50130-4, VCCI CISPR 32 Class A, RCM AS-NZS CISPR 32 Class A, KS C 9832 Class A, KS C 9835
Safety	UL 62368-1, CAN/CSA C22.2 NO. 62368-1, IEC 62471
環境	IEC/EN 63000, IEC 60529 IP66, IEC 62262 IK10, NEMA TS 2-2013 (2.2.7, 2.2.8, 2.2.9), NEMA 250 type 4X

DORI (EN62676-4 standard)

Detect (25PPM/ 8PPF)	Wide	59.5m(195.3ft)
	Tele	2340.4m(7678.4ft)
Observe (63PPM/ 19PPF)	Wide	23.8m(78.1ft)
	Tele	936.2m(3071.4ft)
Recognize (125PPM/ 38PPF)	Wide	11.9m(39.1ft)
	Tele	468.1m(1535.7ft)
Identify (250PPM/ 76PPF)	Wide	6.0m(19.5ft)
	Tele	234.0m(767.8ft)

Design and specifications are subject to change without notice. The latest product information / specification can be found at HanwhaVision.com
Hanwha Vision is formerly known as Hanwha Techwin.

© Hanwha Vision CO., LTD. All rights reserved.

XNP-C6403R

2MP 40x AI IR PTZ カメラ



CAD

Unit: mm [inch]

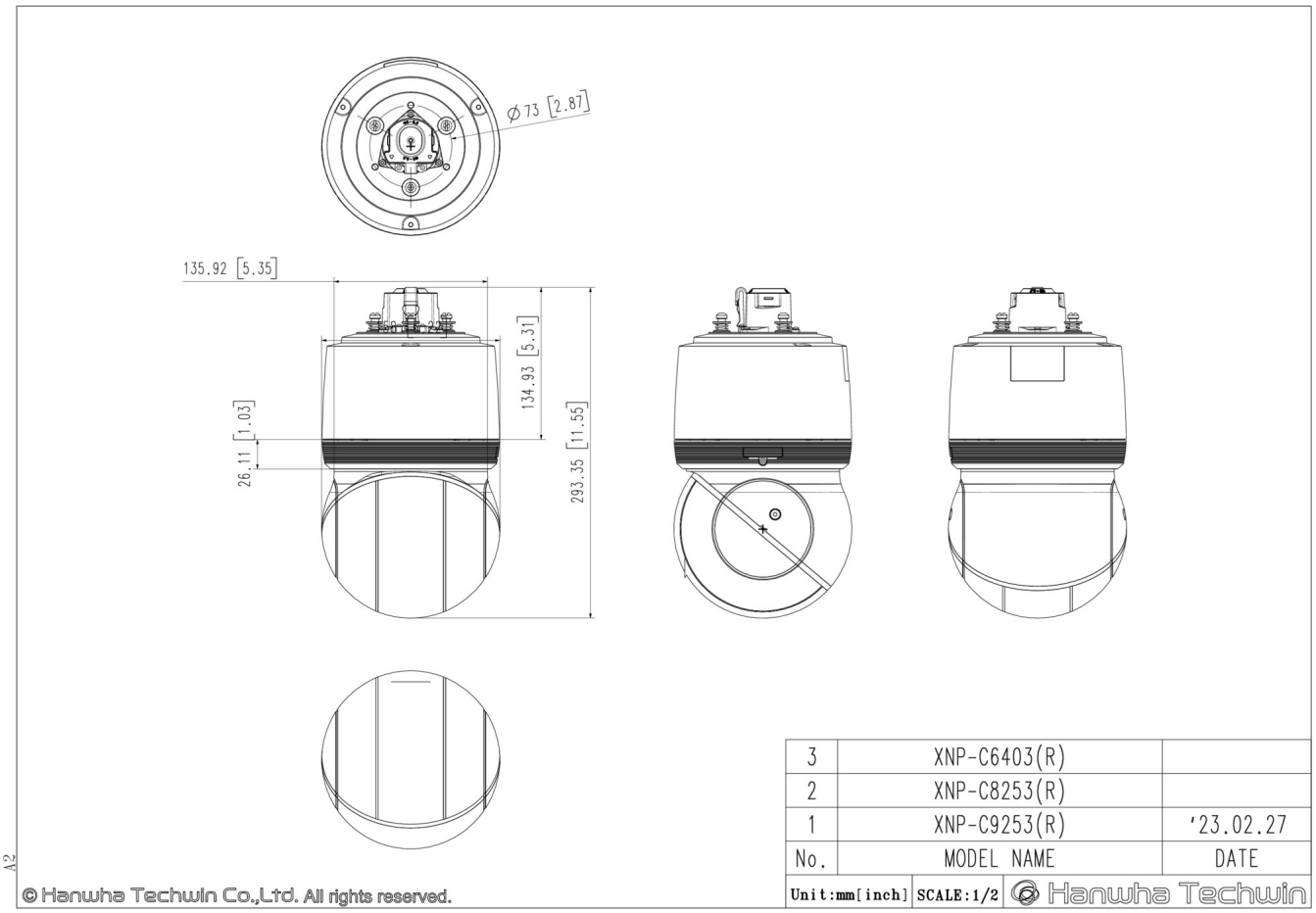

Design and specifications are subject to change without notice. The latest product information / specification can be found at HanwhaVision.com
Hanwha Vision is formerly known as Hanwha Techwin.

© Hanwha Vision CO., LTD. All rights reserved.