

Network PTZ

XNP-C6403R

2MP 40x AI IR PTZ PLUS Camera

Key Features

- CloudConnector Compatible – Connects easily with HealthPro, OnCloud
- 2MP resolution
- 40X optical zoom
- IR viewable length : 200m (656ft)
- 40x optical zoom lens (4.25mm~170mm)
- -20° tilt look-up capability to see above the horizon
- Lens heater & spin dry for water/snow removal
- 360° endless pan
- Triple codec H.265/H.264/MJPEG
- WiseStream III technology
- extreme WDR
- Azimuth display (Cardinal & intermediate directions)
- AI-based Object Auto tracking (Person, Vehicle), target lock tracking, Intelligent video analytics
- Analytics events based on AI engine: Object detection (Person/Face/Vehicle/License plate), IVA (Virtual line/Area, Enter/Exit, Loitering, direction, intrusion), Analytics events: Defocus detection, Motion detection, Tampering, Fog detection, Audio detection, Sound classification (with NW I/O box), Object auto-tracking (Person/Vehicle), Target lock track
- true D/N
- DIS with Built-in Gyro sensor
- Dual Memory slots (Maximum 512GB x 2)
- IP66, IK10, NEMA4X, NEMA TS-2 2.2.8 (Vibration) & 2.2.9 (Shock)
- HPoE (IEEE802.3bt, Class6, Type3, Injector included)
- TPM 2.0 with FIPS 140-2 level 2
- Optional SPM-4210 Network I/O box for alarm & audio I/O
- Operating Temperature -40°C~+55°C (-40°F ~ +131°F)

Design and specifications are subject to change without notice. The latest product information / specification can be found at HanwhaVision.com
Hanwha Vision is formerly known as Hanwha Techwin.

© Hanwha Vision CO., LTD. All rights reserved.

XNP-C6403R

2MP 40x AI IR PTZ PLUS Camera



Specifications

Video

Imaging Device	Size	1/2.8"
	Type	CMOS
Resolution		1920x1080, 1280x1024, 1280x960, 1280x720, 1024x768, 800x600, 800x448, 720x576, 720x480, 640x480, 640x360, 320x240
Max. Framerate	H.265/H.264	60fps/50fps(60Hz/50Hz)
	MJPEG	30fps
Min. Illumination (Lux)	Color(1/30sec, 30IRE)	0.05
	BW(1/30sec, 30IRE)	0.005, 0 (IR LED On)

Lens

Focal Length (mm)		4.25~170
Zoom Ratio	Optical	40x
	Digital	32x
Max Aperture Ratio (F number)	Wide	1.6
	Tele	4.95
Angular Field of View	Horizontal	65.66°~1.88°
	Vertical	39.4°~1.09°
Min. Object Distance		5m(16.4ft)
Focus Control		Oneshot AF, Focus save
Lens Type		DC auto iris

Pan / Tilt / Rotate

Pan / Tilt / Rotate Range	Pan	360° Endless
	Tilt	90°~-20°
Pan Speed	Preset	Max. 700°/sec
	Manual	0.024°/sec~250°/sec
Tilt Speed	Preset	Max. 500°/sec
	Manual	0.024°/sec~250°/sec
Sequence		Preset(300ea), Swing, Group(6ea), Trace, Tour, Auto Run, Schedule
Preset Accuracy		Up to ±0.1°, Pan/Tilt correction

Design and specifications are subject to change without notice. The latest product information / specification can be found at HanwhaVision.com
Hanwha Vision is formerly known as Hanwha Techwin.

© Hanwha Vision CO., LTD. All rights reserved.

Operational

Direction Indicator		Support
Day & Night		Auto(ICR)
Backlight Compensation		BLC, HLC, WDR, SSDR
Wide Dynamic Range (dB)		150
Digital Noise Reduction		WiseNR II (Based on AI engine), SSNR V
Digital Image Stabilization		Support(built-in gyro sensor)
Defog		Support
Motion Detection	Quantity	8ea
	Shape	8point Polygonal zones
Privacy Masking	Quantity	32ea
	Shape	4point Quadrangle zones
	Color / Option	Gray, Green, Red, Blue, Black, White, Mosaic
Gain Control		Off, Max gain, Manual
White Balance		ATW, NarrowATW, AWC, Manual, Indoor, Outdoor, Mercury, Sodium
Electronic Shutter	Mode	Minimum, Maximum, Anti flicker, Prefer shutter control(Based on AI engine)
	Speed Range	2~1/12,000sec
Video Rotation		Flip&Mirror
Alarm Interface	Others	Support alarm I/O via optional I/O box
Alarm Triggers		Analytics, Network disconnect, Alarm input, Time schedule, MQTT subscription
Alarm Events When Alarm Trigger Occurred		File upload(image): e-mail/FTP/SFTP, File upload(video clip): FTP/SFTP, Notification: e-mail, Recording: SD/SDHC/SDXC or NAS recording at event triggers,Alarm output, Handover: PTZ preset,send message by HTTP/HTTPS/TCP,Audio clip playback, MQTT: publication
Audio In		Support via optional I/O box
Audio Out		Support via optional I/O box
Light Type		IR LED
Light Viewable Length	IR	WiseIR 200m(656.17ft)
IR Wavelength		850nm
Water Removal		Support(Spin Dry, Lens heater)
Auto Tracking		Support, Object auto tracking(Person/Vehicle), Target lock tracking

Analytics

Classified Object Type		Person, Face, Vehicle, License plate
Attributes	Vehicle	Type(car, bus, truck, motorcycle, bicycle)
Thumbnail		DetectionShot

Design and specifications are subject to change without notice. The latest product information / specification can be found at HanwhaVision.com
Hanwha Vision is formerly known as Hanwha Techwin.

© Hanwha Vision CO., LTD. All rights reserved.

Analytics

Analytics Events	Based on AI Engine	Object detection, Virtual line(Crossing/Direction), Virtual area(Loitering/Intrusion/Enter/Exit), Motion detection
	Normal	Tampering, Fog detection, Audio detection, Sound classification, Shock detection, Virtual area(Appear/Disappear)

Network

Ethernet		Metal shielded RJ-45(10/100BASE-T)
Video Compression		H.265: Main, H.264: Main/Baseline/High,MJPEG
Smart Codec		Manual, WiseStreamIII
Bitrate Control		H.265/H.264: CBR or VBR, MJPEG: VBR
Streaming	Unicast	Up to 20 users
	Multicast	Support
	Multiple Streaming	Up to 10 profiles
Protocol		IPv4, IPv6, TCP/IP, UDP/IP, RTP(UDP), RTP(TCP), RTCP, RTSP, NTP, HTTP, HTTPS, SSL/TLS, DHCP, FTP, SFTP, SMTP, ICMP, IGMPv2, SNMPv1/v2c/v3(MIB-2), ARP, DNS, DDNS, QoS, UPnP, Bonjour, LLDP, CDP, SRTP(TCP, UDP Unicast), MQTT, NTCIP 1205
Application Programming Interface	ONVIF	S, G, T, M
	Others	SUNAPI(HTTP API), Hanwha Vision Open Platform
Direct Cloud Connection		Support

Security

OS / Firmware Protect	Encrypted firmware, Secure boot, Signed firmware
User authentication	Digest authentication, Prevent brute-force attack
Network authentication	IEEE 802.1X(EAP-TLS, EAP-LEAP, EAP-PEAP, MSCHAPv2)
Secure Communication	HTTPS, WSS(WebSocket Secure), SRTP
Access Control	IP-based access control
Data Protect	Encryption credentials, Encrypt compress for live recording file export
Audit	Access / System / Event Log management
Device ID	Device certificate(Hanwha Vision Root CA)
Secure Storage	TPM(Trusted platform module), HTPM(Hanwha Trusted Platform Module), SDcard partition encrypt(AES-256)
Security Certificate	TPM 2.0 with FIPS 140-2 level2

General

Memory	RAM	4GB
	Flash	512MB
Edge Storage	Micro SD/SDHC/SDXC	Max. 512GB x 2slot(Total 1TB)

Design and specifications are subject to change without notice. The latest product information / specification can be found at HanwhaVision.com
Hanwha Vision is formerly known as Hanwha Techwin.

© Hanwha Vision CO., LTD. All rights reserved.

Environmental & Electrical

Operating Condition	Temperature	-40°C~+50°C(-40°F~+122°F)
	Humidity	0~100% RH(condensing)
	Others	+74°C(+165°F)(Max) based on NEMA-TS 2(2.2.7), Start up should be done at above -30°C, Humidity control with AIR vent
Storage Condition	Temperature	-50°C~+60°C(-58°F~+140°F)
	Humidity	0~90% RH(non-condensing)
Wind Load		241km/h(150mph)
EPA(Effective Projected Area)		0.035㎡
Input Voltage		PoE++(IEEE802.3bt type3, Class6)
Power Consumption	PoE	Max. 40W, Typical 24W

Mechanical

Color	White, Black
Material	Aluminum, PC(Polycarbonate), Hard-coated dome
RAL Code	RAL9003, RAL9005
Product Dimensions	ø158x293.3mm(6.22x11.55")
Product Weight	3,200g(7.05lb)

Certifications & Standards

EMC	FCC 47 CFR 15 Subpart B Class A, ICES-3(A)/NMB-3(A), CE/UKCA - EN55032 Class A, EN 50130-4, VCCI CISPR 32 Class A, RCM AS-NZS CISPR 32 Class A, KS C 9832 Class A, KS C 9835
Safety	UL 62368-1, CAN/CSA C22.2 NO. 62368-1, IEC 62471
Environment	IEC/EN 63000, IEC 60529 IP66, IEC 62262 IK10, NEMA TS 2-2013 (2.2.7, 2.2.8, 2.2.9), NEMA 250 type 4X

DORI (EN62676-4 standard)

Detect (25PPM/ 8PPF)	Wide	59.5m(195.3ft)
	Tele	2340.4m(7678.4ft)
Observe (63PPM/ 19PPF)	Wide	23.8m(78.1ft)
	Tele	936.2m(3071.4ft)
Recognize (125PPM/ 38PPF)	Wide	11.9m(39.1ft)
	Tele	468.1m(1535.7ft)
Identify (250PPM/ 76PPF)	Wide	6.0m(19.5ft)
	Tele	234.0m(767.8ft)

Design and specifications are subject to change without notice. The latest product information / specification can be found at HanwhaVision.com
Hanwha Vision is formerly known as Hanwha Techwin.

© Hanwha Vision CO., LTD. All rights reserved.

XNP-C6403R

2MP 40x AI IR PTZ PLUS Camera



CAD

Unit: mm [inch]

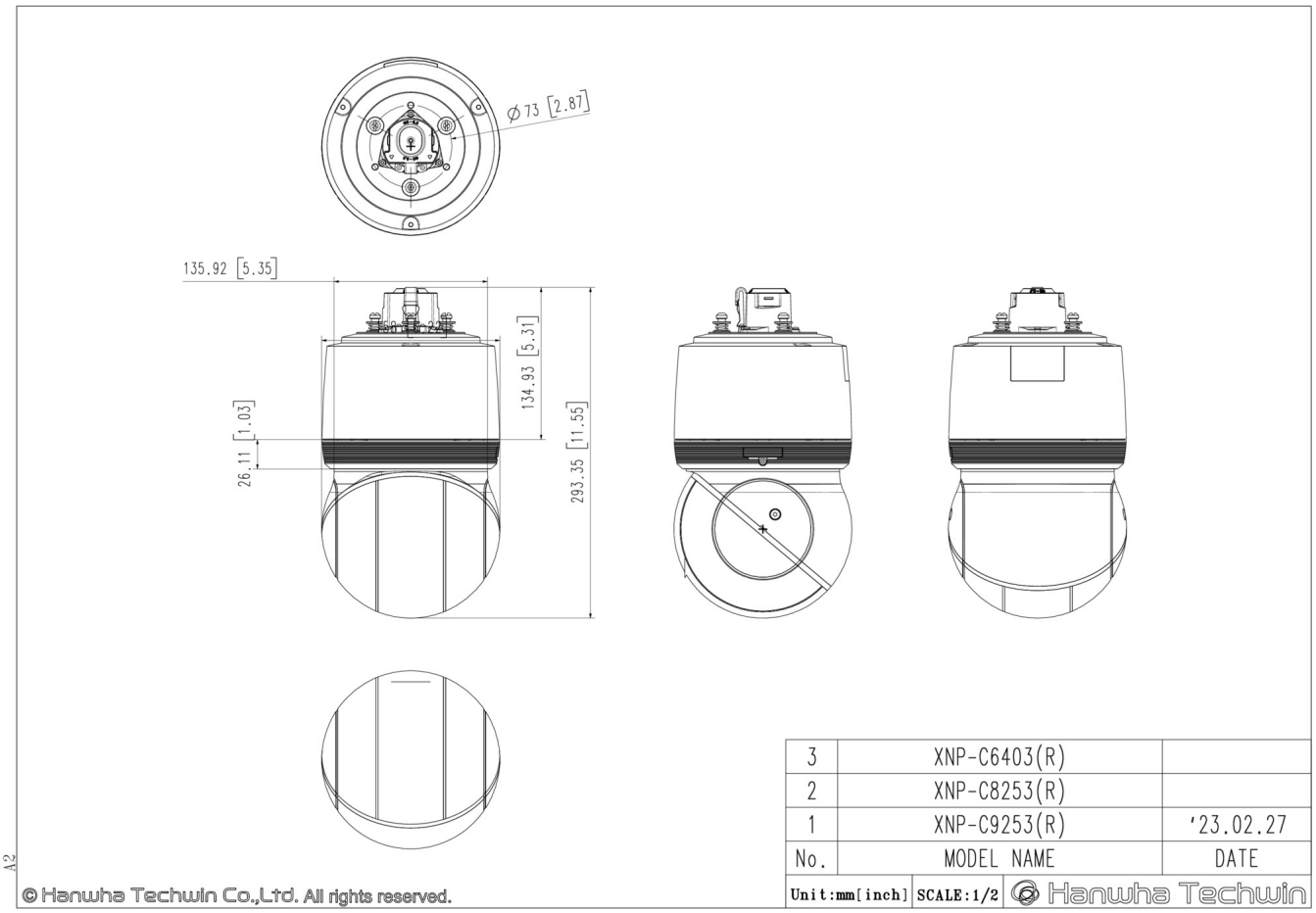

© Hanwha Vision CO., LTD. All rights reserved.