Hanwha Vision

NETWORK CAMERA

Quick Guide

XNV-6011

CE

COMPONENT

As for each sales country, accessories are not the same.

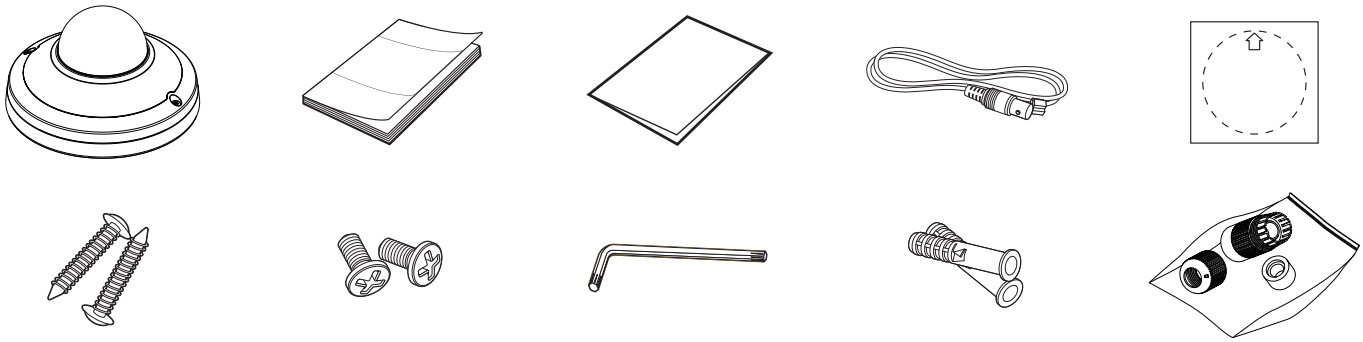

- Not Included : SD CARD

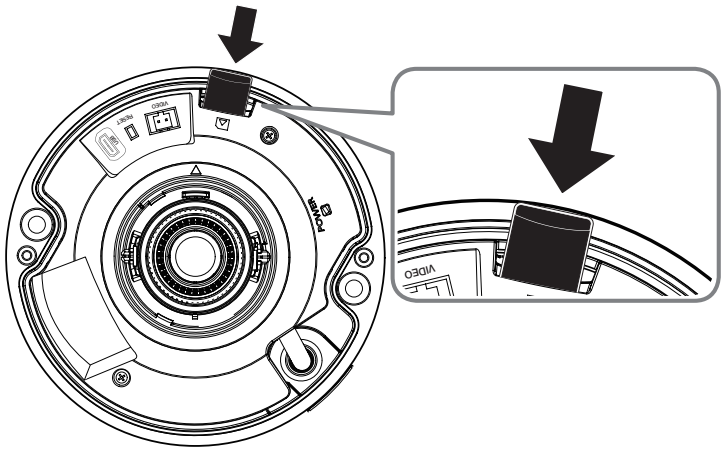

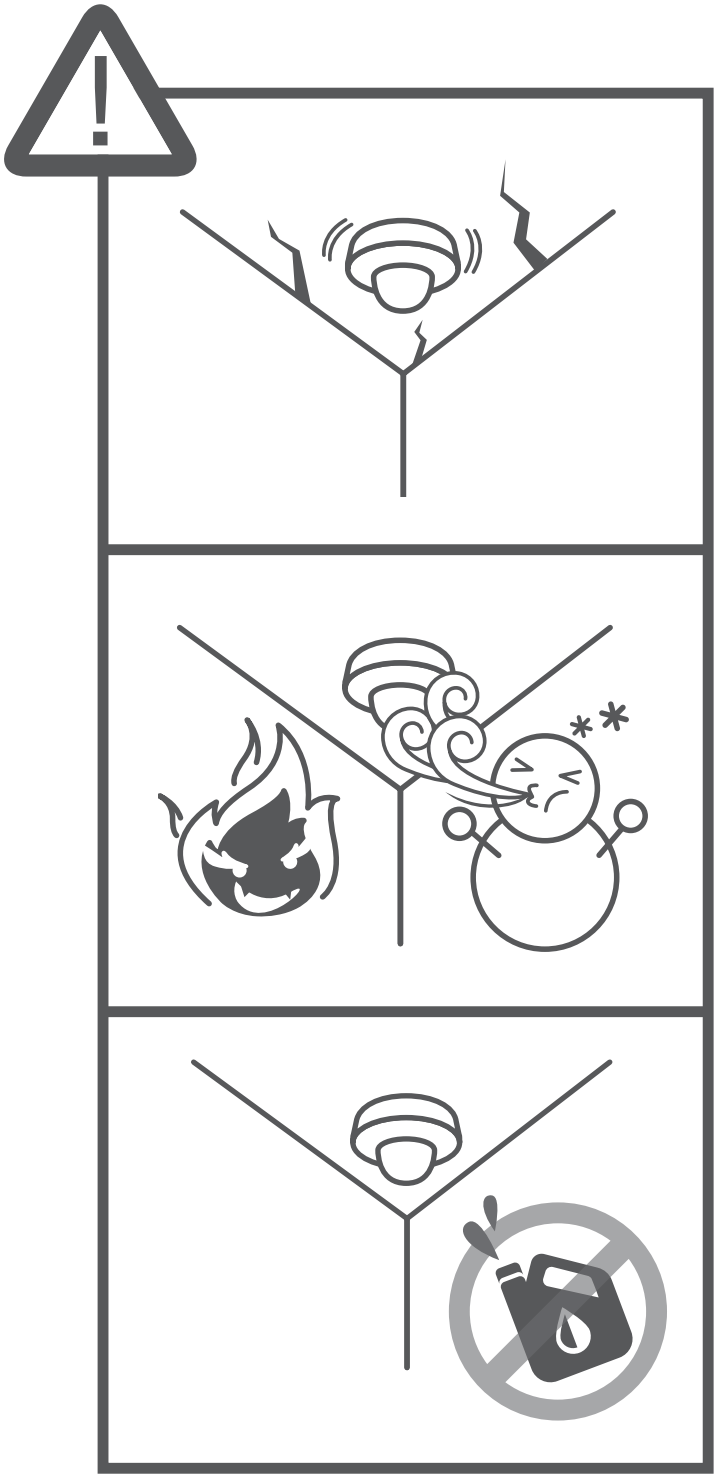

INSTALLATION

1-1

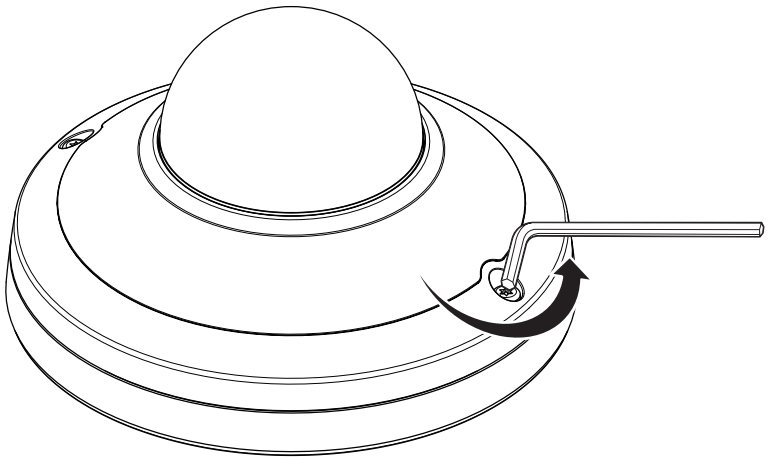

1-2

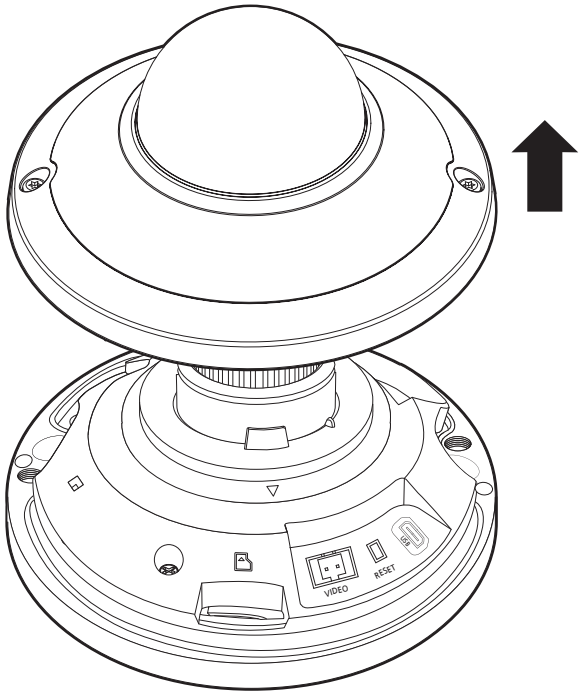

INSTALLATION

1-3

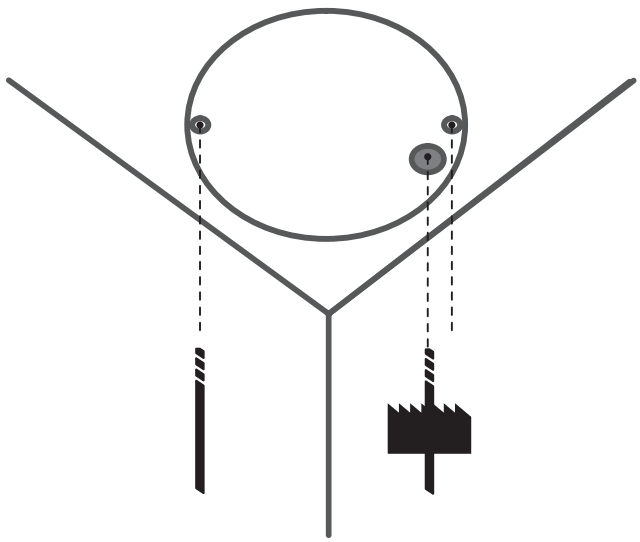

1-4

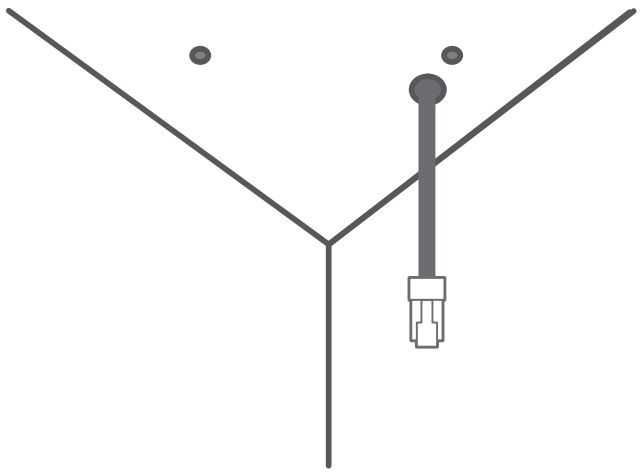

1-5

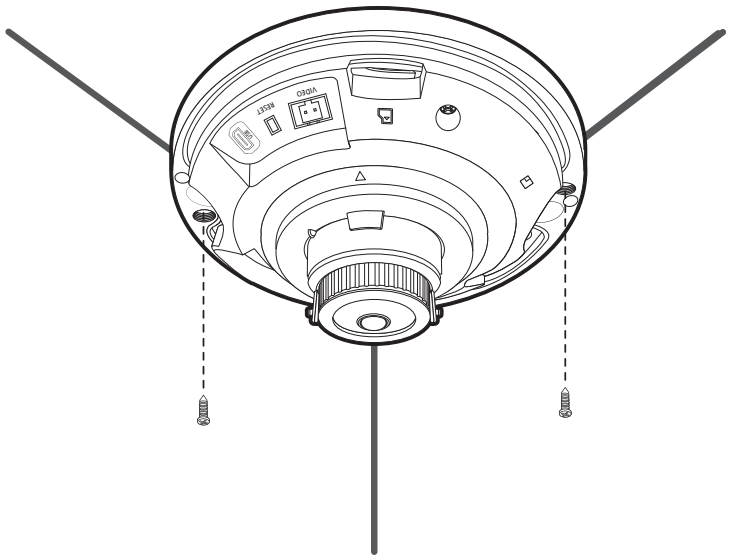

1-6

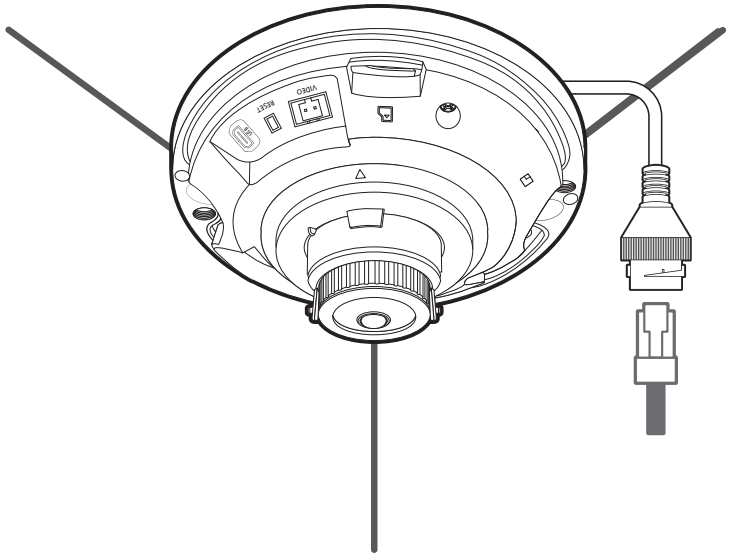

INSTALLATION

1-7

- Not included: WiFi dongle, OTG adapter

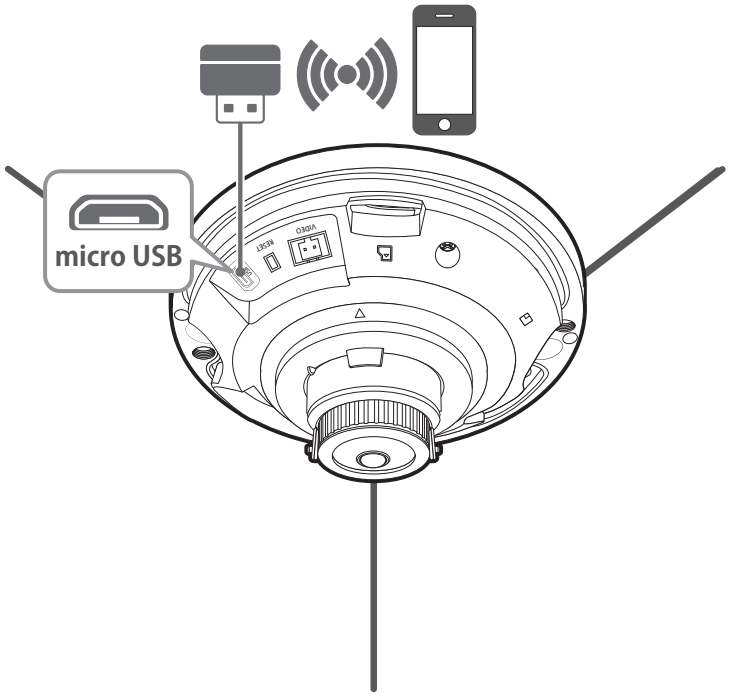

1-8





1-9

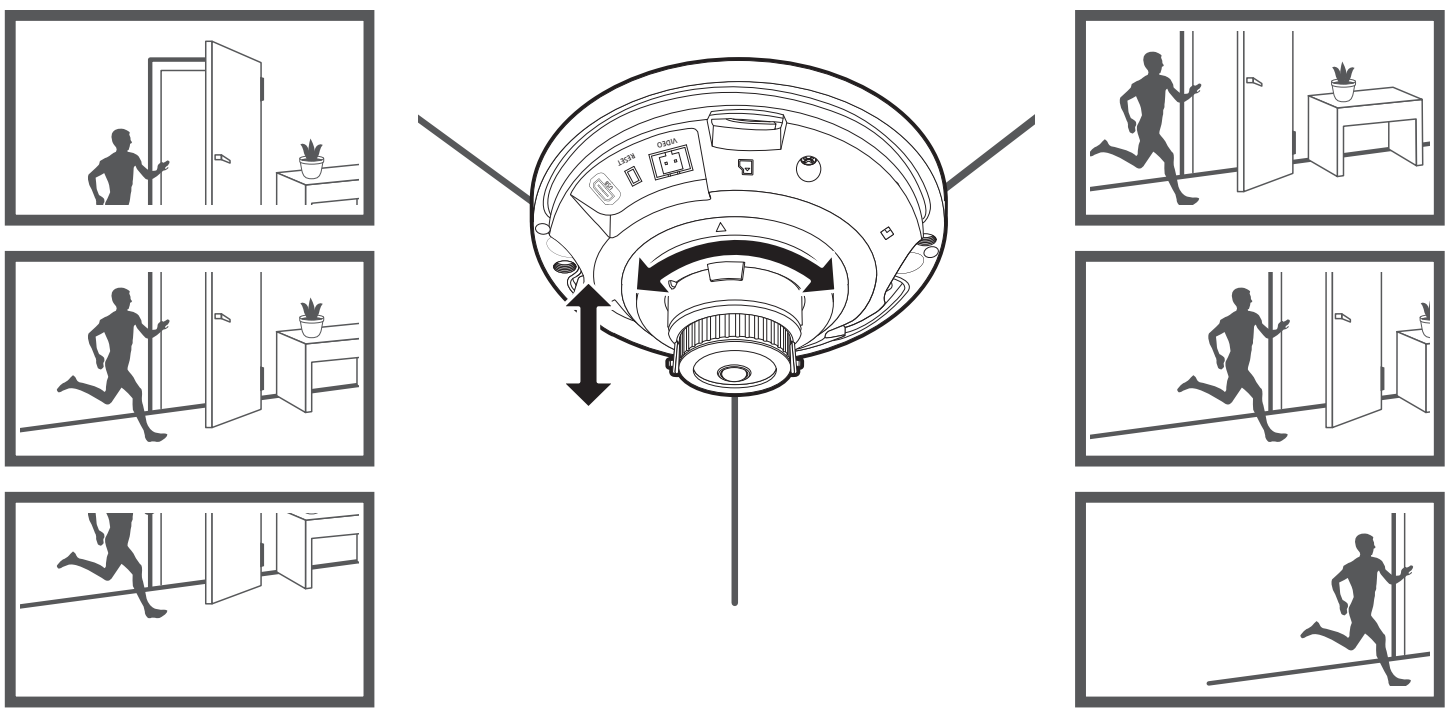

1-10

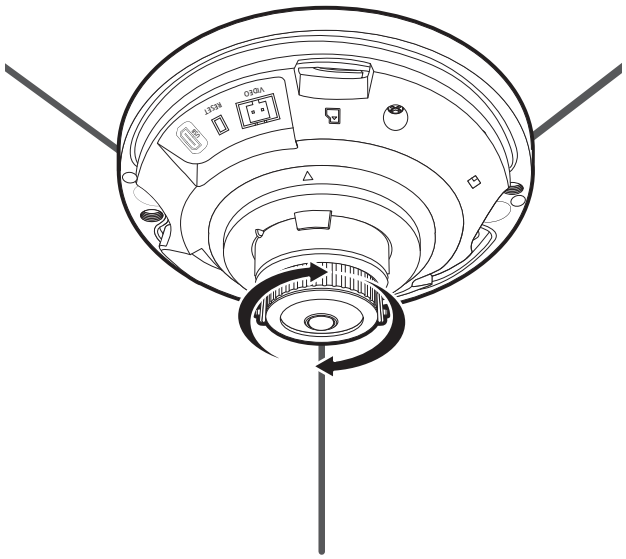

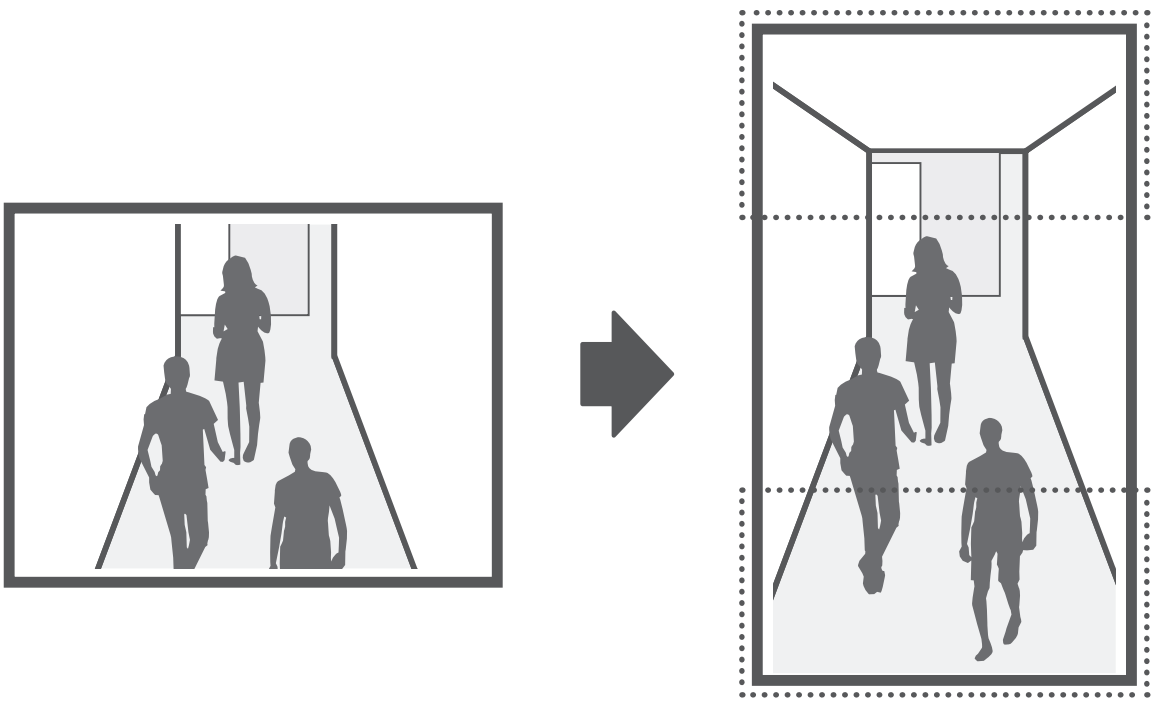

1-11

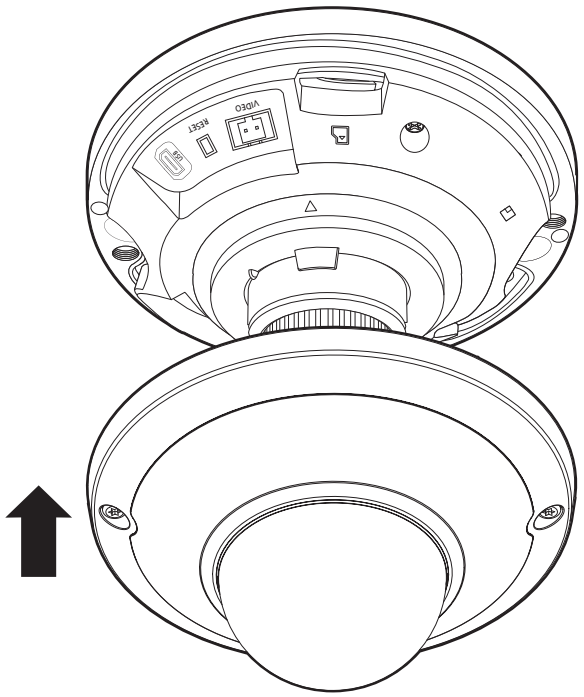

1-12

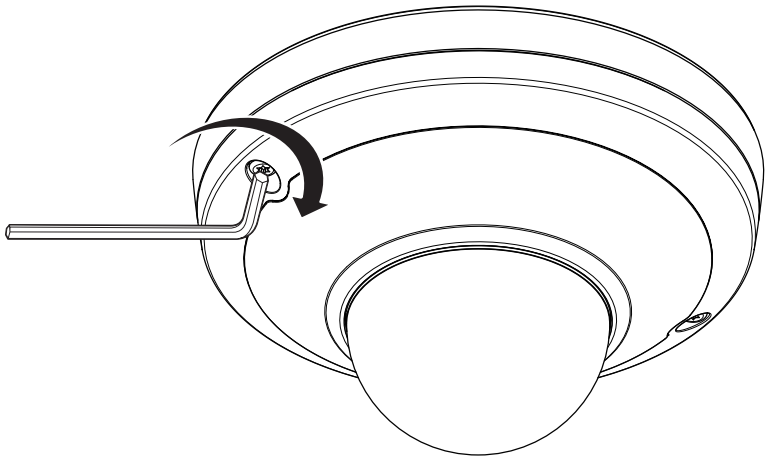

1-13





PASSWORD SETTING

When you access the product for the first time, you must register the login password.
When the "**Password change**" window appears, enter the new password.

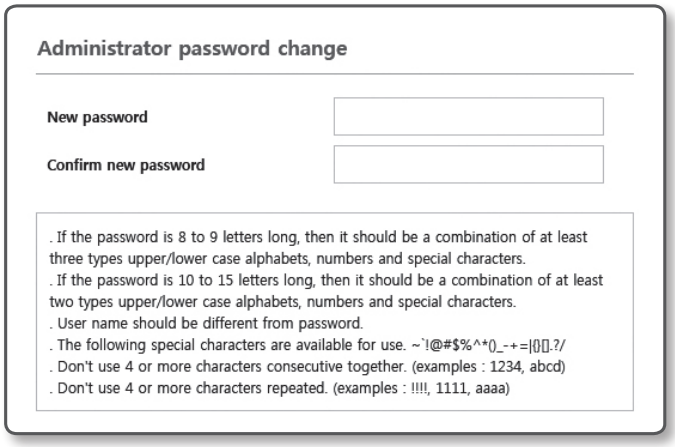

- For a new password with 8 to 9 digits, you must use at least 3 of the following: uppercase/ lowercase letters, numbers and special characters. For a password with 10 to 15 digits, you must use at least 2 types of those mentioned.
  - Special characters that are allowed. : ~`!@#$%^*()_-+=|{}[].?/
- For higher security, you are not recommended to repeat the same characters or consecutive keyboard inputs for your passwords.
- If you lost your password, you can press the [**RESET**] button to initialize the product. So, don't lose your password by using a memo pad or memorizing it.

LOGIN

Whenever you access the camera, the login window appears.
Enter the User ID and password to access the camera.

1. Enter "**admin**" in the <**User Name**> input box.
2. Enter the password in the <**Password**> input field.
3. Click [**OK**].

CONNECTING TO WiFi

Camera setting

1. Connect OTG adapter (5-pin) and WiFi dongle to the micro USB terminal.

Smartphone setting

1. Install the Wisenet Installation application.
2. Select the camera SSID after turning on the Wifi.
3. Run the Wisenet Installation application.
4. When you log in to the camera, the video will be connected. (initial password: 4321)
   - The video will be played without being logged in during the initial connection.
5. You can adjust angle of view while watching the video through smartphone.

Hanwha Vision cares for the environment at all product manufacturing stages, and is taking measures to provide customers with more environmentally friendly products.
The Eco mark represents Hanwha Vision's devotion to creating environmentally friendly products, and indicates that the product satisfies the EU RoHS Directive.



Correct Disposal of This Product (Waste Electrical & Electronic Equipment)

(Applicable in the European Union and other European countries with separate collection systems)

This marking on the product, accessories or literature indicates that the product and its electronic accessories (e.g. charger, headset, USB cable) should not be disposed of with other household waste at the end of their working life. To prevent possible harm to the environment or human health from uncontrolled waste disposal, please separate these items from other types of waste and recycle them responsibly to promote the sustainable reuse of material resources.

Household users should contact either the retailer where they purchased this product, or their local government office, for details of where and how they can take these items for environmentally safe recycling.

Business users should contact their supplier and check the terms and conditions of the purchase contract. This product and its electronic accessories should not be mixed with other commercial wastes for disposal.



Correct disposal of batteries in this product

(Applicable in the European Union and other European countries with separate battery return systems.)

This marking on the battery, manual or packaging indicates that the batteries in this product should not be disposed of with other household waste at the end of their working life. Where marked, the chemical symbols Hg, Cd or Pb indicate that the battery contains mercury, cadmium or lead above the reference levels in EC Directive 2006/66. If batteries are not properly disposed of, these substances can cause harm to human health or the environment.

To protect natural resources and to promote material reuse, please separate batteries from other types of waste and recycle them through your local, free battery return system.

HEVC Advance™
Covered by patents at patentlist.accessadvance.com

microSD, microSDHC, and microSDXC Logos are trademarks of SD-3C LLC. microSD, microSDHC, microSDXC are trademarks or registered trademarks of SD-3C, LLC in the United States, other countries or both.

EAC

Подлежит использованию по назначению
в нормальных условиях
Срок службы : 7 лет.

Türkiye Distribütörü

EDS Elektronik Destek Sanayi ve Ticaret Ltd. Şti.
Meclis Mah. Teraziler Cad. Hayran Sk. (Eskisi Kılıç Sk.) No: 4 Sancaktepe / İstanbul / Türkiye
Tel +90.216.313.25.15

ENTES ELEKTRONİK CİHAZLAR İMALAT VE TİC. A.Ş.
Dudullu Org.San.Bölg. 1. Cad. No:23 34776 Ümraniye / İstanbul / Türkiye
Tel +90.216.313.01.10

TEKNOMAKS TEKNOLOJI / TEKNOMAKS BILISIM
MERDİVENKÖY MAH.DİKYOL SOK. BUSINESS ISTANBUL No:2, Kat:7, D:B67, 34732 Kadıköy / İstanbul / Türkiye
Tel +90.212.217.54.22

Cihazın Ticaret Bakanlığınca önerilen ortalama ömrü
Cihazın EEE yönetmeliklerine uygun olduğuna benzer beyan


Hanwha
Vision