

Network Dome

XNV-6013M

2M H.265 Mobile Flat Camera

Key Features

- Max. 2Megapixel (1920 x 1080) resolution
- Max. 60fps@all resolutions (H.265 / H.264)
- 0.04Lux@F2.0 (Color), 0.04Lux@F2.0 (B/W)
- Built-in 2.8mm fixed lens
- H.265, H.264, MJPEG codec supported
- Multiple streaming
- Day & Night, WDR (150dB)
- SD/SDHC/SDXC memory slot (Max. 256GB)
- IP67, IP6K9K, IK10, NEMA4X
- Hallway view, PoE, LDC, M12 connector support

Design and specifications are subject to change without notice. The latest product information / specification can be found at HanwhaVision.com
Hanwha Vision is formerly known as Hanwha Techwin.

© Hanwha Vision CO., LTD. All rights reserved.

XNV-6013M

2M H.265 Mobile Flat Camera



Specifications

Video

Imaging Device	Size	1/2.8"
	Type	CMOS
Resolution		1920x1080, 1280x1024, 1280x960, 1280x720, 1024x768, 800x600, 800x448, 720x576, 720x480, 640x480, 640x360, 320x240
Max. Framerate	H.265/H.264	60fps/50fps(60Hz/50Hz)
	MJPEG	30fps
Min. Illumination (Lux)	Color(1/30sec, 30IRE)	0.04
	BW(1/30sec, 30IRE)	0.04
Video Out		USB: Micro USB Type B. Preview and installation ONLY. Requires WiFi dongle.

Lens

Focal Length (mm)		2.8
Max Aperture Ratio (F number)	Wide	2.0
Angular Field of View	Horizontal	107.4°
	Vertical	62.2°
	Diagonal	122°
Focus Control		Manual

Pan / Tilt / Rotate

Pan / Tilt / Rotate Range	Pan	±5°
	Tilt	±10°
	Rotate	±90°

Operational

Day & Night	Auto(Electrical)
Backlight Compensation	BLC, HLC, WDR
Wide Dynamic Range (dB)	150
Digital Noise Reduction	SSNR V
Digital Image Stabilization	Support(built-in gyro sensor)
Defog	Support

Design and specifications are subject to change without notice. The latest product information / specification can be found at HanwhaVision.com
Hanwha Vision is formerly known as Hanwha Techwin.

© Hanwha Vision CO., LTD. All rights reserved.

Operational

Motion Detection	Quantity	8ea
	Shape	8point Polygonal zones
Privacy Masking	Quantity	32ea
	Shape	Polygonal zones
	Color / Option	Gray, Green, Red, Blue, Black, White, Mosaic
Gain Control		Low, Middle, High
White Balance		ATW, AWC, Manual, Indoor, Outdoor
LDC		Support
Electronic Shutter	Mode	Minimum, Maximum, Anti flicker
	Speed Range	2~1/12,000sec
Video Rotation		Flip, Mirror, Hallway view(90°/270°)
Alarm Triggers		Analytics, Network disconnect
Alarm Events When Alarm Trigger Occurred		File upload(image): e-mail/FTP, Notification: e-mail, Recording: SD/SDHC/SDXC or NAS recording at event triggers
Audio In		Selectable(mic in/line in)
Audio Out		Line out

Analytics

Analytics Events	Normal	Defocus detection, Motion detection, Tampering, Fog detection, Face detection, Audio detection, Sound classification, Virtual area(Lotering, Intrusion, Enter/Exit, Appear/Disappear), Virtual line(Crossing, Direction) , Digital auto tracking

Network

Ethernet		M12
Video Compression		H.265: Main, H.264: Main/Baseline/High,MJPEG
Audio Compression		G.711 u-law /G.726 selectable,G.726(ADPCM) 8kHz,G.711 8kHz, G.726: 16kbps,24kbps,32kbps,40kbps, AAC-LC: 48kbps at 16kHz
Smart Codec		Manual, WiseStream II
Bitrate Control		H.265/H.264: CBR or VBR, MJPEG: VBR
Streaming	Unicast	Up to 20 users
	Multicast	Support
	Multiple Streaming	Up to 10 profiles
Protocol		IPv4, IPv6, TCP/IP, UDP/IP, RTP(UDP), RTP(TCP), RTCP, RTSP, NTP, HTTP, HTTPS, SSL/TLS, DHCP, FTP, SMTP, ICMP, IGMPv2, SNMPv1/v2c/v3(MIB-2), ARP, DNS, DDNS, QoS, UPnP, Bonjour, PPPoE, PIM-SM
Application Programming Interface	ONVIF	S, G
	Others	SUNAPI(HTTP API), Hanwha Vision Open Platform

Design and specifications are subject to change without notice. The latest product information / specification can be found at HanwhaVision.com
Hanwha Vision is formerly known as Hanwha Techwin.

© Hanwha Vision CO., LTD. All rights reserved.

Security

OS / Firmware Protect	Encrypted firmware, Secure boot, Signed firmware
User authentication	Digest authentication
Network authentication	IEEE 802.1X(EAP-TLS, EAP-LEAP)
Secure Communication	HTTPS
Access Control	IP-based access control
Data Protect	Encryption credentials, Encrypt compress for live recording file export
Audit	Access / System / Event Log management
Secure Storage	SDcard partition encrypt(AES-256)

General

Memory	RAM	1GB
	Flash	256MB
Edge Storage	Micro SD/SDHC/SDXC	Max. 256GB x 1slot

Environmental & Electrical

Operating Condition	Temperature	-40°C~+60°C(-40°F~+140°F)
	Humidity	0~90% RH(non-condensing)
Storage Condition	Temperature	-50°C~+60°C(-58°F~+140°F)
	Humidity	0~90% RH(non-condensing)
Input Voltage		PoE(IEEE802.3af, Class3)
Power Consumption	PoE	Max. 7.20W

Mechanical

Color	Ivory
Material	Aluminum
Product Dimensions	103.7x72.3x126.8mm(4.08x2.85x4.99")
Product Weight	478g(1.04lb)

Certifications & Standards

Environment	IEC 60529 IP67, ISO 20653 IP6K9K, IEC 62262 IK10, NEMA 250 type 4X

Design and specifications are subject to change without notice. The latest product information / specification can be found at HanwhaVision.com
Hanwha Vision is formerly known as Hanwha Techwin.

© Hanwha Vision CO., LTD. All rights reserved.

XNV-6013M

2M H.265 Mobile Flat Camera



CAD

Unit: mm [inch]

This parts should not contain any substances which are specified in AH60-0033K

NO	PART NAME	CODE NO.	MATERIAL	Q'TY	REMARK
1	ASSY-FINAL-XNV-6013M-171012	059188	MATERIAL	1	REMARK

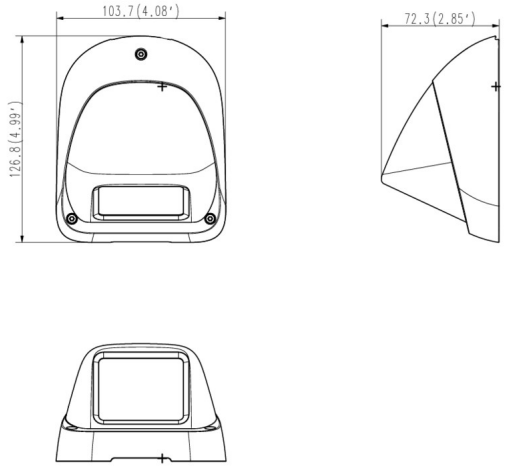

STANDARD TOLERANCE

DIV	Lvl 1	Lvl 2	Lvl 3	Lvl 4	Lvl 5
0-16	±0.05	±0.1	±0.1	±0.2	±0.3
16-63	±0.05	±0.1	±0.2	±0.3	±0.4
63-250	±0.1	±0.2	±0.3	±0.4	±0.4
250-1000	±0.2	±0.3	±0.4	±0.5	±0.6

A3 CHANGE		UNIT	mm	DESIGN	CHECK	APPROVAL	PART NAME	ASSY-FINAL-XNV-6013M-171012
		SCALE	1/2	M.Fujiwara	-	Approval	MODEL NAME	XNV-6013M
				18.01.24	-	18.01.24	CODE NO.	059188
		Hanwha Techwin						

Design and specifications are subject to change without notice. The latest product information / specification can be found at HanwhaVision.com
Hanwha Vision is formerly known as Hanwha Techwin.

© Hanwha Vision CO., LTD. All rights reserved.