

Network Купольные

XNV-6081Z

2МП H.265 вандалозащищенная сетевая купольная камера

Key Features

- Макс. разрешение 2 Мп
- 0,015 лк при F1.4 (цветн.), 0,0015 лк при F1.4 (Ч/Б)
- Дневной и ночной (с выдвижным ИК фильтром) режимы, WDR (150/120 дБ)
- Модульная конструкция, моторизированная функция PTRZ
- Функция обзора коридоров, поддержка WiseStream II
- Видео- и аудиоаналитика, воспроизведение аудио
- Цифровая стабилизация изображения и обнаружение ударов с помощью встроенного гироскопического датчика
- IP67/IP66/IP6K9K, IK10+, NEMA4X
- Технология PoE, 12 В пост. тока, 24 В перем. тока (по доп. заказу)

Design and specifications are subject to change without notice. The latest product information / specification can be found at HanwhaVision.com
Hanwha Vision is formerly known as Hanwha Techwin.

© Hanwha Vision CO., LTD. All rights reserved.

XNV-6081Z

2МП H.265 вандалозащищенная сетевая купольная камера



Specifications

Video

Imaging Device	Size	1/2.8"
	Type	CMOS
Resolution		1920x1080, 1280x1024, 1280x960, 1280x720, 1024x768, 800x600, 800x448, 720x576, 720x480, 640x480, 640x360, 320x240
Max. Framerate	H.265/H.264	60fps/50fps(60Hz/50Hz)
	MJPEG	30fps
Min. Illumination (Lux)	Color(1/30sec, 30IRE)	0.015
	BW(1/30sec, 30IRE)	0.0015
Video Out		USB: Micro USB Type B. Preview and installation ONLY. Requires WiFi dongle.

Lens

Focal Length (mm)		2.8~12
Zoom Ratio	Optical	4.3x
Max Aperture Ratio (F number)	Wide	1.4
	Tele	3.6
Angular Field of View	Horizontal	119.5°~27.9°
	Vertical	62.8°~15.7°
	Diagonal	142.1°~32.0°
Min. Object Distance		0.5m(1.64ft)
Focus Control		Simple focus, Manual
Lens Type		DC auto iris(IR corrected), P iris(IR corrected)

Pan / Tilt / Rotate

Pan / Tilt / Rotate Range	Pan	±175°
	Tilt	0°~85°
	Rotate	±175°
	Others	Remote adjustment(Max. 200cycles)

Operational

Day & Night		Auto(ICR)

Design and specifications are subject to change without notice. The latest product information / specification can be found at HanwhaVision.com
Hanwha Vision is formerly known as Hanwha Techwin.

© Hanwha Vision CO., LTD. All rights reserved.

Operational

Backlight Compensation		BLC, HLC, WDR, SSDR
Wide Dynamic Range (dB)		150
Digital Noise Reduction		SSNR V
Digital Image Stabilization		Support
Defog		Support
Motion Detection	Quantity	8ea
	Shape	8point Polygonal zones
Privacy Masking	Quantity	32ea
	Shape	4point Quadrangle zones
	Color / Option	Gray, Green, Red, Blue, Black, White, Mosaic
Gain Control		Support
White Balance		ATW, AWC, Manual, Indoor, Outdoor
LDC		Support
Electronic Shutter	Mode	Minimum, Maximum, Anti flicker
	Speed Range	2~1/12,000sec
Digital PTZ		Support
Video Rotation		Flip, Mirror, Hallway view(90°/270°)
Alarm Interface	In/Out	Input 1ea, Output 1ea
Alarm Triggers		Analytics, Network disconnect, Alarm input
Alarm Events When Alarm Trigger Occurred		File upload(image): e-mail/FTP, Notification: e-mail, Recording: SD/SDHC/SDXC or NAS recording at event triggers,Alarm output, Handover: PTZ preset,send message by HTTP/HTTPS/TCP,Audio clip playback
Audio In		Selectable(mic in/line in)
Audio Out		Line out

Analytics

Analytics Events	Normal	Defocus detection, Motion detection, Tampering, Fog detection, Face detection, Audio detection, Sound classification, Shock detection, Virtual area(Lotering, Intrusion, Enter/Exit, Appear/Disappear), Virtual line(Crossing, Direction) , Digital auto tracking
Business Intelligence	Normal	People counting, Queue management, Heatmap

Network

Ethernet	RJ-45(10/100BASE-T)
Video Compression	H.265: Main, H.264: Main/Baseline/High,MJPEG
Audio Compression	G.711 u-law /G.726 selectable,G.726(ADPCM) 8kHz,G.711 8kHz, G.726: 16kbps,24kbps,32kbps,40kbps, AAC-LC: 48kbps at 16kHz
Smart Codec	Manual, WiseStream II

Design and specifications are subject to change without notice. The latest product information / specification can be found at HanwhaVision.com
Hanwha Vision is formerly known as Hanwha Techwin.

© Hanwha Vision CO., LTD. All rights reserved.

Network

Bitrate Control		H.265/H.264: CBR or VBR, MJPEG: VBR
Streaming	Unicast	Up to 20 users
	Multicast	Support
	Multiple Streaming	Up to 10 profiles
Protocol		IPv4, IPv6, TCP/IP, UDP/IP, RTP(UDP), RTP(TCP), RTCP, RTSP, NTP, HTTP, HTTPS, SSL/TLS, DHCP, FTP, SMTP, ICMP, IGMPv2, SNMPv1/v2c/v3(MIB-2), ARP, DNS, DDNS, QoS, UPnP, Bonjour, LLDP, SRTP(TCP, UDP Unicast), PIM-SM
Application Programming Interface	ONVIF	S, G, T
	Others	SUNAPI(HTTP API), Hanwha Vision Open Platform
Direct Cloud Connection		Optional (needs gateway)

Security

OS / Firmware Protect	Encrypted firmware, Secure boot, Signed firmware
User authentication	Digest authentication
Network authentication	IEEE 802.1X(EAP-TLS, EAP-LEAP)
Secure Communication	HTTPS, WSS(WebSocket Secure), SRTP
Access Control	IP-based access control
Data Protect	Encryption credentials, Encrypt compress for live recording file export
Audit	Access / System / Event Log management
Secure Storage	SDcard partition encrypt(AES-256)

General

Memory	RAM	1GB
	Flash	256MB
Edge Storage	Micro SD/SDHC/SDXC	Max. 512GB x 2slot(Total 1TB)

Environmental & Electrical

Operating Condition	Temperature	-50°C~+60°C(-58°F~+140°F)
	Humidity	0~90% RH(non-condensing)
	Others	Start up should be done at above -35°C
Storage Condition	Temperature	-50°C~+60°C(-58°F~+140°F)
	Humidity	0~90% RH(non-condensing)
Input Voltage		PoE(IEEE802.3af, Class3), 12VDC, 24VAC
Power Consumption	PoE	Max 11W, typical 4.80W
	12VDC	Max 8.5W, typical 3.71W
	24VAC	Max 11W, typical 5.00W

Mechanical

Color	White

Design and specifications are subject to change without notice. The latest product information / specification can be found at HanwhaVision.com
Hanwha Vision is formerly known as Hanwha Techwin.

© Hanwha Vision CO., LTD. All rights reserved.

Mechanical

Material	Aluminum
RAL Code	RAL9003
Product Dimensions	ø180x125mm(7.1x4.9")
Product Weight	1750g(3.86lb)

Certifications & Standards

Environment	IEC 60529 IP66, IEC 60529 IP67, ISO 20653 IP6K9K, IEC 62262 IK10+, NEMA 250 type 4X

Design and specifications are subject to change without notice. The latest product information / specification can be found at HanwhaVision.com
Hanwha Vision is formerly known as Hanwha Techwin.

© Hanwha Vision CO., LTD. All rights reserved.

XNV-6081Z

2МП H.265 вандалозащищенная сетевая купольная камера



CAD

Unit: mm [inch]

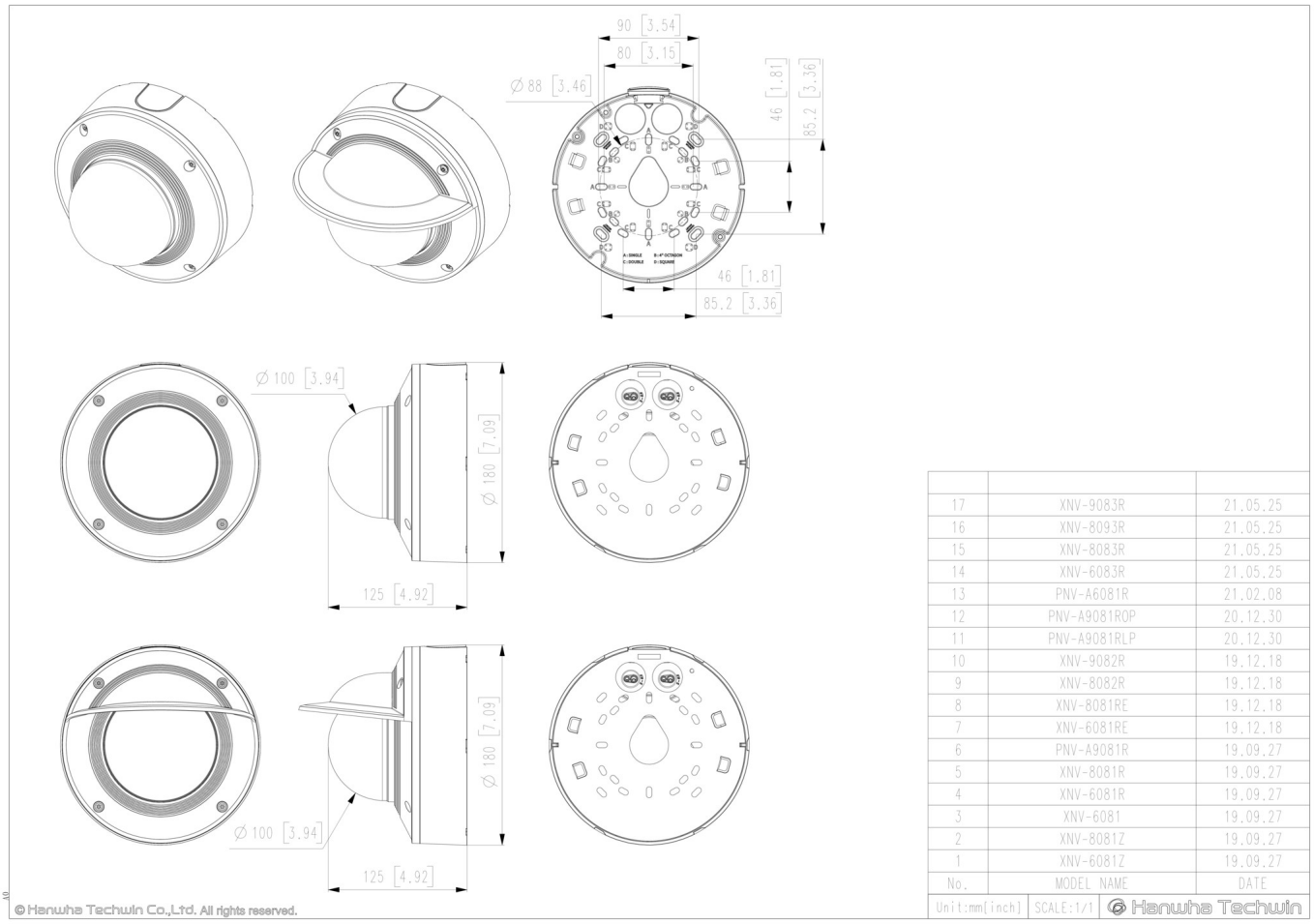

No.	MODEL NAME	DATE
17	XNV-9083R	21.05.25
16	XNV-8093R	21.05.25
15	XNV-8083R	21.05.25
14	XNV-6083R	21.05.25
13	PNV-A6081R	21.02.08
12	PNV-A9081ROP	20.12.30
11	PNV-A9081RLP	20.12.30
10	XNV-9082R	19.12.18
9	XNV-8082R	19.12.18
8	XNV-8081RE	19.12.18
7	XNV-6081RE	19.12.18
6	PNV-A9081R	19.09.27
5	XNV-8081R	19.09.27
4	XNV-6081R	19.09.27
3	XNV-6081	19.09.27
2	XNV-8081Z	19.09.27
1	XNV-6081Z	19.09.27

Unit:mm[inch] | SCALE:1/1 | Hanwha Techwin

Design and specifications are subject to change without notice. The latest product information / specification can be found at HanwhaVision.com
Hanwha Vision is formerly known as Hanwha Techwin.

© Hanwha Vision CO., LTD. All rights reserved.

Compatible Devices



SBP-300LMW



SBP-300WMW1

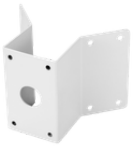

SBP-300KMW



SBP-300BW



SBP-300PMW



SBP-300WMW



SBP-390WMW2



SPB-VAN85W



SBP-300NBW



SBP-300CMW



SBP-187HMW

Design and specifications are subject to change without notice. The latest product information / specification can be found at HanwhaVision.com
Hanwha Vision is formerly known as Hanwha Techwin.

© Hanwha Vision CO., LTD. All rights reserved.