

Network Купольные

XNV-8082R

6MP IR Vandal Dome Camera

Key Features

- 6MP resolution
- 2.8~8.4mm(3x) motorized varifocal
- 0.05Lux@F1.2 (Color), 0Lux (B/W, IR LED on)
- Max.30fps@6MP (H.265/H.264)
- IR viewable length 40m
- Day & Night (ICR), extreme WDR (120dB)
- DIS with built-in Gyro sensor
- Video Analytics (Defocus, Directional detection, Audio detection, Shock detection, Face/Upper body detection)
- Dual SD slots (Max. 1TB)
- Modular structure, PoE support
- IP66/IP67/IP6K9K, IK10+, NEMA4X

Design and specifications are subject to change without notice. The latest product information / specification can be found at HanwhaVision.com
Hanwha Vision is formerly known as Hanwha Techwin.

© Hanwha Vision CO., LTD. All rights reserved.

XNV-8082R

6MP IR Vandal Dome Camera



Specifications

Video

Imaging Device	Size	1/2.8"
	Type	CMOS
Resolution		3328x1872, 3072x1728, 2688x1520, 2592x1944, 1920x1080, 1600x1200, 1280x1024, 1280x960, 1280x720, 1024x768, 800x600, 800x448, 720x576, 720x480, 640x480, 640x360, 320x240
Max. Framerate	H.265/H.264	30fps/25fps(60Hz/50Hz)
	MJPEG	30fps(@6MP Max. 5fps)
Min. Illumination (Lux)	Color(1/30sec, 30IRE)	0.05
	BW(1/30sec, 30IRE)	0.005
Video Out		CVBS: 1.0 Vp-p / 75Ω composite for installation, USB: Micro USB Type B. Preview and installation ONLY. Requires WiFi dongle.

Lens

Focal Length (mm)		2.8~8.4
Zoom Ratio	Optical	3x
Max Aperture Ratio (F number)	Wide	1.2
	Tele	2.8
Angular Field of View	Horizontal	114°~40°
	Vertical	62°~22°
	Diagonal	133°~46°
Min. Object Distance		0.7m(2.23ft)
Focus Control		Simple focus
Lens Type		DC auto iris(IR corrected), P iris(IR corrected)

Pan / Tilt / Rotate

Pan / Tilt / Rotate Range	Pan	0°~360°
	Tilt	0°~85°
	Rotate	0°~355°

Operational

Day & Night	Auto(ICR)

Design and specifications are subject to change without notice. The latest product information / specification can be found at HanwhaVision.com
Hanwha Vision is formerly known as Hanwha Techwin.

© Hanwha Vision CO., LTD. All rights reserved.

Operational

Backlight Compensation		BLC, HLC, WDR, SSDR
Wide Dynamic Range (dB)		120
Digital Noise Reduction		SSNR V
Digital Image Stabilization		Support(built-in gyro sensor)
Defog		Support
Motion Detection	Quantity	8ea
	Shape	8point Polygonal zones
Privacy Masking	Quantity	32ea
	Shape	4point Quadrangle zones
	Color / Option	Gray, Green, Red, Blue, Black, White, Mosaic
Gain Control		Off, Max gain, Manual
White Balance		ATW, NarrowATW, AWC, Manual, Indoor, Outdoor
LDC		Support(Fill/stretch mode)
Electronic Shutter	Mode	Minimum, Maximum, Anti flicker, Prefer shutter control
	Speed Range	2~1/12,000sec
Video Rotation		Flip, Mirror, Hallway view(90°/270°)
Alarm Interface	In/Out	2 configurable I/O ports
Alarm Triggers		Analytics, Network disconnect, Alarm input, App event, Time schedule, MQTT subscription
Alarm Events When Alarm Trigger Occurred		File upload(image): e-mail/FTP/SFTP, File upload(video clip): FTP/SFTP, Notification: e-mail, Recording: SD/SDHC/SDXC or NAS recording at event triggers,Alarm output, Handover: PTZ preset,send message by HTTP/HTTPS/TCP,Audio clip playback, MQTT: publication
Audio In		Selectable(mic in/line in)
Audio Out		Line out
Light Type		IR LED
Light Viewable Length	IR	WiseIR 40m(131.23ft)
IR Wavelength		850nm

Analytics

Analytics Events	Normal	Defocus detection, Motion detection, Tampering, Fog detection, Face/upper body detection, Audio detection, Sound classification, Shock detection, Virtual area(Lotering, Intrusion, Enter/Exit, Appear/Disappear), Virtual line(Crossing, Direction) , Digital auto tracking
Business Intelligence	Normal	People counting, Queue management, Heatmap

Network

Ethernet	Metal shielded RJ-45(10/100/1000BASE-T)
Video Compression	H.265: Main, H.264: Main/Baseline/High,MJPEG

Design and specifications are subject to change without notice. The latest product information / specification can be found at HanwhaVision.com
Hanwha Vision is formerly known as Hanwha Techwin.

© Hanwha Vision CO., LTD. All rights reserved.

Network

Audio Compression		G.711 u-law /G.726 selectable,G.726(ADPCM) 8kHz,G.711 8kHz, G.726: 16kbps,24kbps,32kbps,40kbps, AAC-LC: 48kbps at 16kHz
Smart Codec		Manual, WiseStream II
Bitrate Control		H.265/H.264: CBR or VBR, MJPEG: VBR
Streaming	Unicast	Up to 20 users
	Multicast	Support
	Multiple Streaming	Up to 10 profiles
Protocol		IPv4, IPv6, TCP/IP, UDP/IP, RTP(UDP), RTP(TCP), RTCP, RTSP, NTP, HTTP, HTTPS, SSL/TLS, DHCP, FTP, SFTP, SMTP, ICMP, IGMPv2, SNMPv1/v2c/v3(MIB-2), ARP, DNS, DDNS, QoS, UPnP, Bonjour, LLDP, CDP, SRTP(TCP, UDP Unicast), MQTT
Application Programming Interface	ONVIF	S, G, T
	Others	SUNAPI(HTTP API), Hanwha Vision Open Platform
Direct Cloud Connection		Support

Security

OS / Firmware Protect	Encrypted firmware, Secure boot, Signed firmware
User authentication	Digest authentication, Prevent brute-force attack
Network authentication	IEEE 802.1X(EAP-TLS, EAP-LEAP, EAP-PEAP, MSCHAPv2)
Secure Communication	HTTPS, WSS(WebSocket Secure), SRTP
Access Control	IP-based access control
Data Protect	Encryption credentials, Encrypt compress for live recording file export
Audit	Access / System / Event Log management
Device ID	Device certificate(Hanwha Vision Root CA)
Secure Storage	HTPM(Hanwha Trusted Platform Module), SDcard partition encrypt(AES-256)
Security Certificate	CyberSecurity assuarance program UL CAP(UL 2900-2-3 L2)

General

Memory	RAM	4GB
	Flash	512MB
Edge Storage	Micro SD/SDHC/SDXC	Max. 512GB x 2slot(Total 1TB)
Edge Storage(OnCloud)	Micro SD/SDHC/SDXC	Max. 1TB x 2slots (Total 2TB) *Hanwha Vision branded microSD cards have been certified and recommended for OnCloud edge recording.

Environmental & Electrical

Operating Condition	Temperature	-50°C~+60°C(-58°F~+140°F)
	Humidity	0~95% RH(non-condensing)
	Others	Start up should be done at above -30°C
Storage Condition	Temperature	-50°C~+60°C(-58°F~+140°F)
	Humidity	0~90% RH(non-condensing)

Design and specifications are subject to change without notice. The latest product information / specification can be found at HanwhaVision.com
Hanwha Vision is formerly known as Hanwha Techwin.

© Hanwha Vision CO., LTD. All rights reserved.

Environmental & Electrical

Input Voltage		PoE(IEEE802.3af, Class3), 12VDC, 24VAC
Power Consumption	PoE	Max. 12.95W, typical 10.7W
	12VDC	Max. 11.5W, typical 9W
	24VAC	Max. 13.5W, typical 11W
Power Redundance Failover		Support

Mechanical

Color	White
Material	Aluminum
RAL Code	RAL9003
Product Dimensions	ø180x125mm(7.09x4.92")
Product Weight	1,900g(4.19lb)
Compatible Conduit Hole	19.1mm(3/4")(M25)
Compatible Gang Box	Single, Double, 4" Octagon, Square

Certifications & Standards

EMC	FCC 47 CFR 15 Subpart B Class A, ICES-3(A)/NMB-3(A), CE/UKCA - EN55032 Class A, EN 50130-4, EN 61000-3-2, EN 61000-3-3, VCCI CISPR 32 Class A, RCM AS-NZS CISPR 32 Class A, KS C 9832 Class A, KS C 9835
Safety	UL 60950-1, CAN/CSA C22.2 NO. 60950-1, IEC 62471
Environment	IEC/EN 63000, IEC 60529 IP66, IEC 60529 IP67, ISO 20653 IP6K9K, IEC 62262 IK10+, NEMA 250 type 4X

DORI (EN62676-4 standard)

Detect (25PPM/ 8PPF)	Wide	43.2m(141.81ft)
	Tele	182.9m(599.97ft)
Observe (63PPM/ 19PPF)	Wide	17.3m(56.73ft)
	Tele	73.1m(239.99ft)
Recognize (125PPM/ 38PPF)	Wide	8.6m(28.36ft)
	Tele	36.6m(119.99ft)
Identify (250PPM/ 76PPF)	Wide	4.3m(14.18ft)
	Tele	18.3m(60.00ft)

Design and specifications are subject to change without notice. The latest product information / specification can be found at HanwhaVision.com
Hanwha Vision is formerly known as Hanwha Techwin.

© Hanwha Vision CO., LTD. All rights reserved.

XNV-8082R

6MP IR Vandal Dome Camera



CAD

Unit: mm [inch]

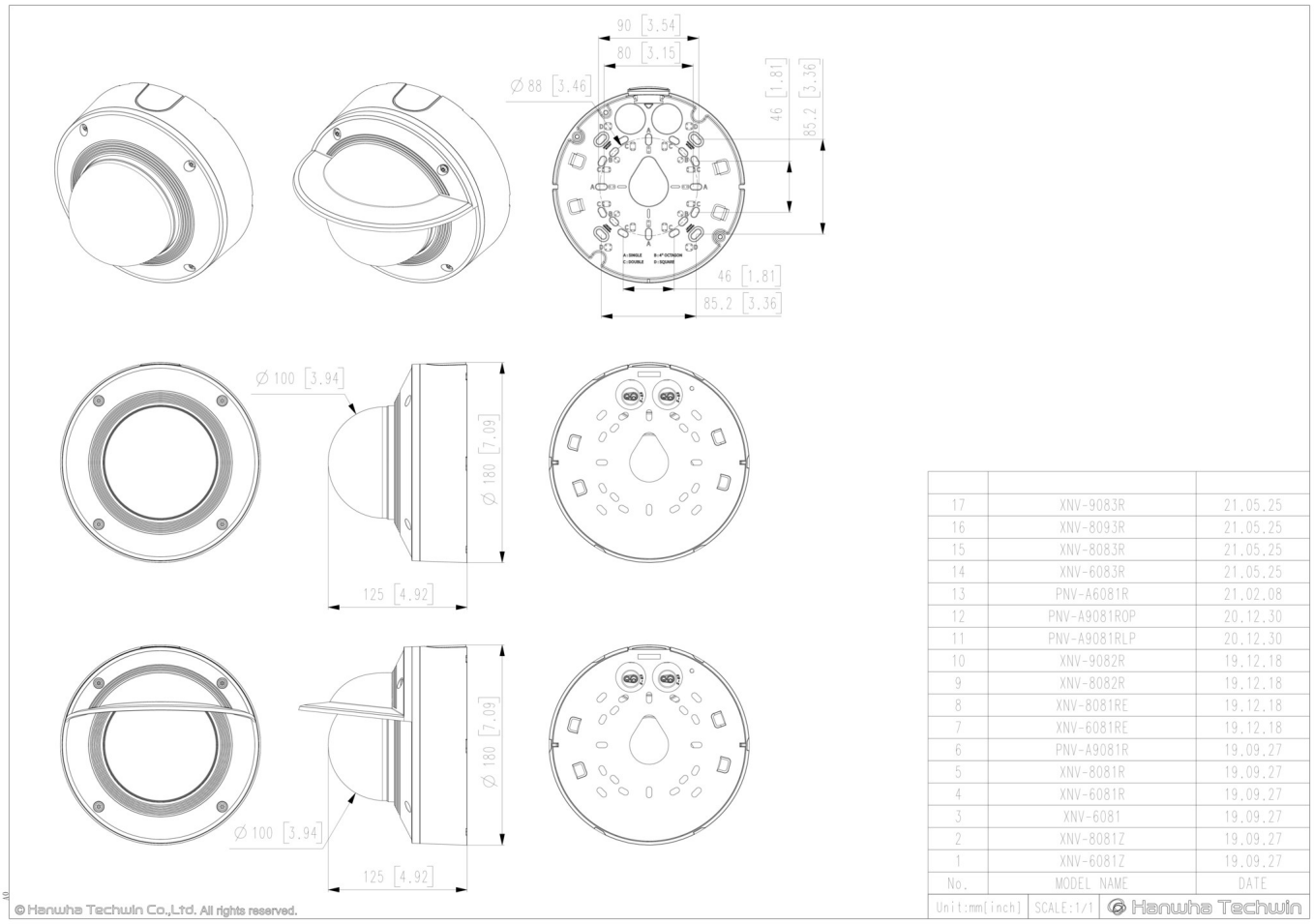

No.	MODEL NAME	DATE
17	XNV-9083R	21.05.25
16	XNV-8093R	21.05.25
15	XNV-8083R	21.05.25
14	XNV-6083R	21.05.25
13	PNV-A6081R	21.02.08
12	PNV-A9081ROP	20.12.30
11	PNV-A9081RLP	20.12.30
10	XNV-9082R	19.12.18
9	XNV-8082R	19.12.18
8	XNV-8081RE	19.12.18
7	XNV-6081RE	19.12.18
6	PNV-A9081R	19.09.27
5	XNV-8081R	19.09.27
4	XNV-6081R	19.09.27
3	XNV-6081	19.09.27
2	XNV-8081Z	19.09.27
1	XNV-6081Z	19.09.27

Unit:mm[inch] | SCALE:1/1 | Hanwha Techwin

Design and specifications are subject to change without notice. The latest product information / specification can be found at HanwhaVision.com
Hanwha Vision is formerly known as Hanwha Techwin.

© Hanwha Vision CO., LTD. All rights reserved.

Compatible Devices



SBP-300LMW



SBP-300WMW1

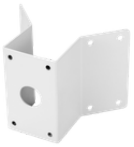

SBP-300KMW



SBP-300BW



SBP-300PMW



SBP-300WMW



SBP-390WMW2



SPB-VAN85W



SBP-300NBW



SBP-300CMW



SBP-187HMW



SBP-180HMW1



SBV-180BW



SBV-180WW



SBP-150CMI



SBP-300CMI



SBP-300CMW1



SBP-900CMW



SBP-300CMTW



SBP-300CMTS



SBD-180PMW



SBP-300PMW2



SHD-1350FPW



SBP-156LMW1



SBP-300KMW1

Design and specifications are subject to change without notice. The latest product information / specification can be found at HanwhaVision.com
Hanwha Vision is formerly known as Hanwha Techwin.

© Hanwha Vision CO., LTD. All rights reserved.