

Network Dome

# XNV-9083RZ

## 8MP AI IR Vandal Dome Camera

## Key Features

- 8MP resolution
- 4.4~9.3mm (2.1x) motorized varifocal
- Color: 0.04 Lux (F1.3, 1/30sec, 30IRE), 0 Lux (IR LED on)
- Maximum 30 fps (H.265/H.264)
- IR viewable length: 15m (49.21ft), 30m(98.43ft) based on scene
- Day & Night (ICR), extremeWDR (120 dB)
- Hard-coated dome bubble
- WiseNR II (Based on AI engine), WiseStreamIII (Based on AI engine)
- Analytics events based on AI engine (NPU) : Object detection (Person/Face/Vehicle - car, truck, bus, bicycle, motorcycle/License plate),
IVA (Virtual line/Area, Enter/Exit, Loitering, Direction, Intrusion)
- Analytics events : Defocus detection, Motion detection, Tampering, Fog detection, Audio detection, Sound classification, Shock detection, Appear/Disappear
- IP66/IP67/IP6K9K, NEMA4X, IK10+

Design and specifications are subject to change without notice. The latest product information / specification can be found at HanwhaVision.com
Hanwha Vision is formerly known as Hanwha Techwin.

© Hanwha Vision CO., LTD. All rights reserved.

# XNV-9083RZ

8MP AI IR Vandal Dome Camera



## Specifications

### Video

| | | |
|---|---|---|
| **Imaging Device** | Size | 1/1.8" |
| | Type | CMOS |
| **Resolution** | | 3840x2160, 3328x1872, 3072x1728, 2688x1520, 2592x1944, 1920x1080, 1600x1200, 1280x1024, 1280x960, 1280x720, 1024x768, 800x600, 800x448, 720x576, 720x480, 640x480, 640x360, 320x240 |
| **Max. Framerate** | H.265/H.264 | 30fps/25fps(60Hz/50Hz) |
| | MJPEG | 30fps(@8MP Max. 5fps) |
| **Min. Illumination (Lux)** | Color(1/30sec, 30IRE) | 0.03 |
| | BW(1/30sec, 30IRE) | 0.003 |

### Lens

| | | |
|---|---|---|
| **Focal Length (mm)** | | 4.4~9.3 |
| **Zoom Ratio** | Optical | 2.1x |
| **Max Aperture Ratio (F number)** | Wide | 1.3 |
| | Tele | 2.15 |
| **Angular Field of View** | Horizontal | 113°~47° |
| | Vertical | 58°~26° |
| | Diagonal | 138°~54° |
| **Min. Object Distance** | | 0.5m(1.64ft) |
| **Focus Control** | | Simple focus, Manual |
| **Lens Type** | | P iris(IR corrected) |

### Pan / Tilt / Rotate

| | | |
|---|---|---|
| **Pan / Tilt / Rotate Range** | Pan | 0°~350° |
| | Tilt | 0°~85° |
| | Rotate | 0°~340° |
| | Others | Remote adjustment(Max. 200cycles) |

### Operational

| | |
|---|---|
| **Day & Night** | Auto(ICR) |
| **Backlight Compensation** | BLC, HLC, WDR, SSDR |

Design and specifications are subject to change without notice. The latest product information / specification can be found at HanwhaVision.com
Hanwha Vision is formerly known as Hanwha Techwin.

© Hanwha Vision CO., LTD. All rights reserved.

## Operational

| | | |
|---|---|---|
| **Wide Dynamic Range (dB)** | | 120 |
| **Digital Noise Reduction** | | WiseNR II (Based on AI engine), SSNR V |
| **Digital Image Stabilization** | | Support |
| **Defog** | | Support |
| **Motion Detection** | Quantity | 8ea |
| | Shape | 8point Polygonal zones |
| **Privacy Masking** | Quantity | 32ea |
| | Shape | 4point Quadrangle zones |
| | Color / Option | Gray, Green, Red, Blue, Black, White, Mosaic |
| **Gain Control** | | Off, Max gain, Manual |
| **White Balance** | | ATW, NarrowATW, AWC, Manual, Indoor, Outdoor |
| **LDC** | | Support(Fill/stretch mode) |
| **Electronic Shutter** | Mode | Minimum, Maximum, Anti flicker, Prefer shutter control(Based on AI engine) |
| | Speed Range | 2~1/12,000sec |
| **Video Rotation** | | Flip, Mirror, Hallway view(90°/270°) |
| **Alarm Interface** | Others | Support alarm I/O via optional I/O box |
| **Alarm Triggers** | | Analytics, Network disconnect, Alarm input, App event, Time schedule, MQTT subscription |
| **Alarm Events When Alarm Trigger Occurred** | | File upload(image): e-mail/FTP/SFTP,<br>File upload(video clip): FTP/SFTP,<br>Notification: e-mail,<br>Recording: SD/SDHC/SDXC or NAS recording at event triggers,Alarm output,<br>Handover: PTZ preset,send message by HTTP/HTTPS/TCP,<br>MQTT: publication |
| **Audio In** | | Support via optional I/O box |
| **Audio Out** | | Support via optional I/O box |
| **Light Type** | | IR LED |
| **Light Viewable Length** | IR | 15m(49.21ft), 30m(98.43ft) wall installation scenario |
| **IR Wavelength** | | 850nm |

## Analytics

| | | |
|---|---|---|
| **Classified Object Type** | | Person, Face, Vehicle, License plate |
| **Attributes** | Vehicle | Type(car, bus, truck, motorcycle, bicycle) |
| **Thumbnail** | | DetectionShot |
| **Analytics Events** | Based on AI Engine | Object detection, Virtual line(Crossing/Direction), Virtual area(Loitering/Intrusion/Enter/Exit), Motion detection |
| | Normal | Defocus detection, Tampering, Fog detection, Audio detection, Sound classification, Shock detection, Virtual area(Appear/Disappear) |
| **Business Intelligence** | Based on AI Engine | People counting, Vehicle counting |



© Hanwha Vision CO., LTD. All rights reserved.

## Network

| | | |
|---|---|---|
| **Ethernet** | | Metal shielded RJ-45(10/100/1000BASE-T) |
| **Video Compression** | | H.265: Main,<br>H.264: Main/Baseline/High,MJPEG |
| **Smart Codec** | | Manual, WiseStreamIII |
| **Bitrate Control** | | H.265/H.264: CBR or VBR,<br>MJPEG: VBR |
| **Streaming** | Unicast | Up to 20 users |
| | Multicast | Support |
| | Multiple Streaming | Up to 10 profiles |
| **Protocol** | | IPv4, IPv6, TCP/IP, UDP/IP, RTP(UDP), RTP(TCP), RTCP, RTSP, NTP, HTTP, HTTPS, SSL/TLS, DHCP, FTP, SFTP, SMTP, ICMP, IGMPv2, SNMPv1/v2c/v3(MIB-2), ARP, DNS, DDNS, QoS, UPnP, Bonjour, LLDP, CDP, SRTP(TCP, UDP Unicast), MQTT |
| **Application Programming Interface** | ONVIF | S, G, T, M |
| | Others | SUNAPI(HTTP API), Hanwha Vision Open Platform |
| **Direct Cloud Connection** | | Support |

## Security

| | |
|---|---|
| **OS / Firmware Protect** | Encrypted firmware, Secure boot, Signed firmware |
| **User authentication** | Digest authentication, Prevent brute-force attack |
| **Network authentication** | IEEE 802.1X(EAP-TLS, EAP-LEAP, EAP-PEAP, MSCHAPv2) |
| **Secure Communication** | HTTPS, WSS(WebSocket Secure), SRTP |
| **Access Control** | IP-based access control |
| **Data Protect** | Encryption credentials, Encrypt compress for live recording file export |
| **Audit** | Access / System / Event Log management |
| **Device ID** | Device certificate(Hanwha Vision Root CA) |
| **Secure Storage** | TPM(Trusted platform module), HTPM(Hanwha Trusted Platform Module), SDcard partition encrypt(AES-256) |
| **Security Certificate** | TPM 2.0 with FIPS 140-2 level2 |

## General

| | | |
|---|---|---|
| **Memory** | RAM | 4GB |
| | Flash | 512MB |
| **Edge Storage** | Micro SD/SDHC/SDXC | Max. 512GB x 2slot(Total 1TB) |
| **Edge Storage(OnCloud)** | Micro SD/SDHC/SDXC | Max. 1TB x 2slots (Total 2TB) *Hanwha Vision branded microSD cards have been certified and recommended for OnCloud edge recording. |

## Environmental & Electrical

| | | |
|---|---|---|
| **Operating Condition** | Temperature | -50°C~+55°C(-58°F~+131°F) |
| | Humidity | 0~100% RH(condensing) |
| | Others | Start up should be done at above -30°C, Humidity control with AIR vent |

Design and specifications are subject to change without notice. The latest product information / specification can be found at HanwhaVision.com
Hanwha Vision is formerly known as Hanwha Techwin.

© Hanwha Vision CO., LTD. All rights reserved.

## Environmental & Electrical

| | | |
|---|---|---|
| **Storage Condition** | Temperature | -50°C~+60°C(-58°F~+140°F) |
| | Humidity | 0~90% RH(non-condensing) |
| **Input Voltage** | | PoE+(IEEE802.3at, Class4) |
| **Power Consumption** | PoE | Max. 22.5W, typical 12.1W |

## Mechanical

| | |
|---|---|
| **Color** | White |
| **Material** | Aluminum, Hard-coated dome |
| **RAL Code** | RAL9003 |
| **Product Dimensions** | ø180x135mm(7.09x5.31") |
| **Product Weight** | 2,000g(4.41lb) |
| **Compatible Conduit Hole** | 19.1mm(3/4")(M25) |
| **Compatible Gang Box** | Single, Double, 4" Octagon, Square |

## Certifications & Standards

| | |
|---|---|
| **EMC** | EN 50121-4, FCC 47 CFR 15 Subpart B Class A, ICES-3(A)/NMB-3(A), CE/UKCA - EN55032 Class A, EN 50130-4, EN 61000-3-2, EN 61000-3-3, VCCI CISPR 32 Class A, RCM AS-NZS CISPR 32 Class A, KS C 9832 Class A, KS C 9835 |
| **Safety** | UL 62368-1, CAN/CSA C22.2 NO. 62368-1, IEC 62471 |
| **Environment** | IEC/EN 63000, IEC 60529 IP66, IEC 60529 IP67, ISO 20653 IP6K9K, IEC 62262 IK10+, NEMA 250 type 4X |

## DORI (EN62676-4 standard)

| | | |
|---|---|---|
| **Detect (25PPM/ 8PPF)** | Wide | 50.8m(166.77ft) |
| | Tele | 176.6m(579.49ft) |
| **Observe (63PPM/ 19PPF)** | Wide | 20.3m(66.71ft) |
| | Tele | 70.7m(231.80ft) |
| **Recognize (125PPM/ 38PPF)** | Wide | 10.2m(33.35ft) |
| | Tele | 35.3m(115.90ft) |
| **Identify (250PPM/ 76PPF)** | Wide | 5.1m(16.68ft) |
| | Tele | 17.7m(57.95ft) |

Design and specifications are subject to change without notice. The latest product information / specification can be found at HanwhaVision.com
Hanwha Vision is formerly known as Hanwha Techwin.

© Hanwha Vision CO., LTD. All rights reserved.

# XNV-9083RZ

8MP AI IR Vandal Dome Camera



## CAD

**Unit:** mm [inch]

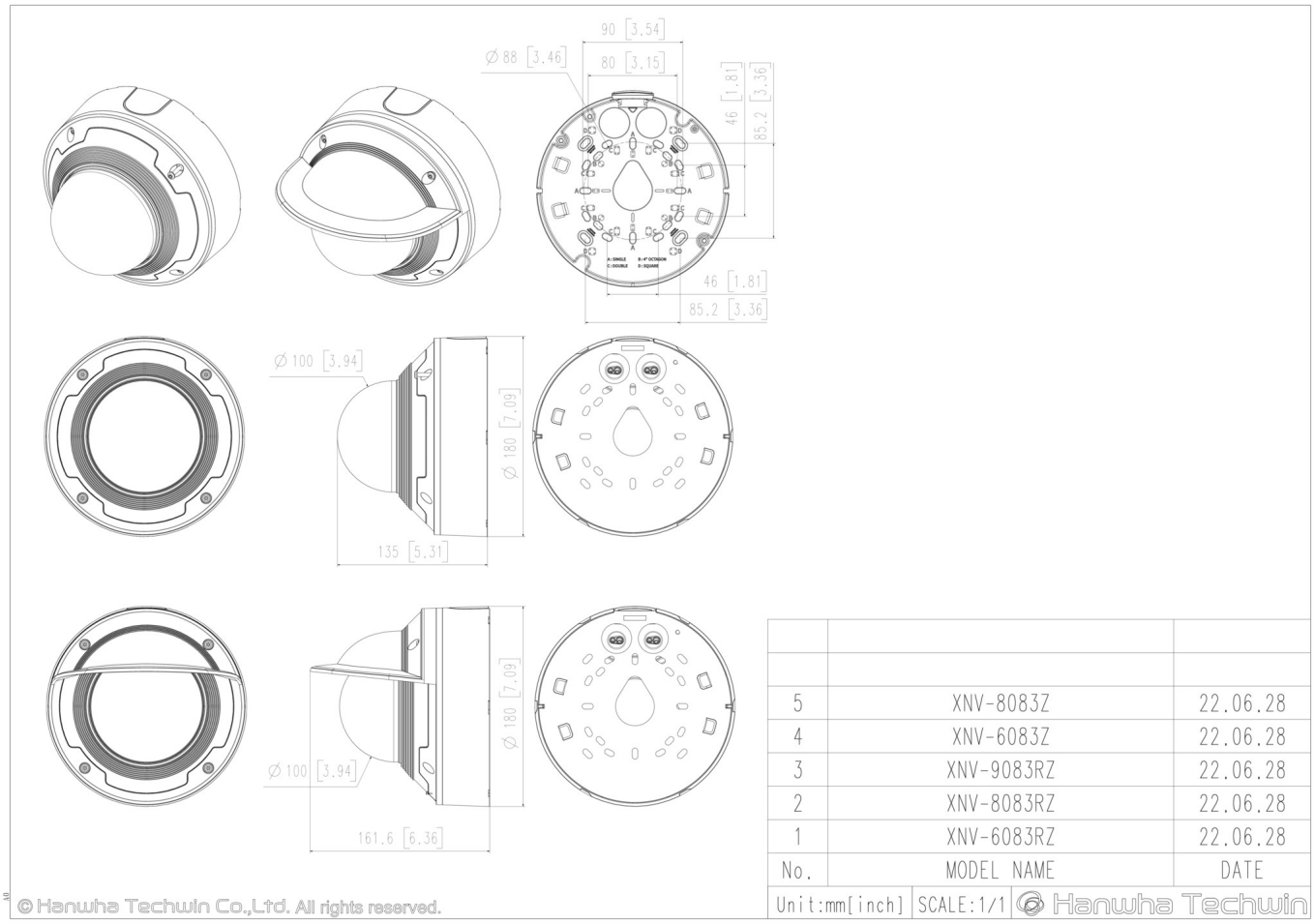


| | | |
|---|---|---|
| | | |
| 5 | XNV-8083Z | 22.06.28 |
| 4 | XNV-6083Z | 22.06.28 |
| 3 | XNV-9083RZ | 22.06.28 |
| 2 | XNV-8083RZ | 22.06.28 |
| 1 | XNV-6083RZ | 22.06.28 |
| No. | MODEL NAME | DATE |
| Unit:mm[inch] | SCALE:1/1 | Hanwha Techwin |

Design and specifications are subject to change without notice. The latest product information / specification can be found at HanwhaVision.com
Hanwha Vision is formerly known as Hanwha Techwin.

© Hanwha Vision CO., LTD. All rights reserved.

## Compatible Devices



SBP-180HMW1



SBV-180BW



SBV-180WW



SBP-150CMI



SBP-300CMI



SBP-300CMW1



SBP-900CMW



SBP-300CMTW



SBP-300CMTS



SBP-300WMW



SBP-300WMW1



SBP-390WMW2



SBD-180PMW



SBP-300PMW2



SHD-1370FPW



SBP-300LMW



SBP-156LMW1



SBP-300KMW1



SBP-300NBW



SPB-VAN89W



SPM-4210

Design and specifications are subject to change without notice. The latest product information / specification can be found at HanwhaVision.com
Hanwha Vision is formerly known as Hanwha Techwin.

© Hanwha Vision CO., LTD. All rights reserved.