

Network Купольные

XNV-9083RZ

8MP AI IR Vandal Dome Camera

Key Features

- 8MP resolution
- 4.4~9.3mm (2.1x) motorized varifocal
- Color: 0.04 Lux (F1.3, 1/30sec, 30IRE), 0 Lux (IR LED on)
- Maximum 30 fps (H.265/H.264)
- IR viewable length: 15m (49.21ft), 30m(98.43ft) based on scene
- Day & Night (ICR), extremeWDR (120 dB)
- Hard-coated dome bubble.
- WiseNR II (Based on AI engine), WiseStreamIII (Based on AI engine)
- Analytics events based on AI engine (NPU) : Object detection (Person/Face/Vehicle - car, truck, bus, bicycle, motorcycle/License plate), IVA (Virtual line/Area, Enter/Exit, Loitering, Direction, Intrusion)
- Analytics events : Defocus detection, Motion detection, Tampering, Fog detection, Audio detection, Sound classification, Shock detection, Appear/Disappear
- IP66/IP67/IP6K9K, NEMA4X, IK10+

Design and specifications are subject to change without notice. The latest product information / specification can be found at HanwhaVision.com
Hanwha Vision is formerly known as Hanwha Techwin.

© Hanwha Vision CO., LTD. All rights reserved.

XNV-9083RZ

8MP AI IR Vandal Dome Camera



Specifications

Video

Imaging Device	Size	1/1.8"
	Type	CMOS
Resolution		3840x2160, 3328x1872, 3072x1728, 2688x1520, 2592x1944, 1920x1080, 1600x1200, 1280x1024, 1280x960, 1280x720, 1024x768, 800x600, 800x448, 720x576, 720x480, 640x480, 640x360, 320x240
Max. Framerate	H.265/H.264	30fps/25fps(60Hz/50Hz)
	MJPEG	30fps(@8MP Max. 5fps)
Min. Illumination (Lux)	Color(1/30sec, 30IRE)	0.03
	BW(1/30sec, 30IRE)	0.003

Lens

Focal Length (mm)		4.4~9.3
Zoom Ratio	Optical	2.1x
Max Aperture Ratio (F number)	Wide	1.3
	Tele	2.15
Angular Field of View	Horizontal	113°~47°
	Vertical	58°~26°
	Diagonal	138°~54°
Min. Object Distance		0.5m(1.64ft)
Focus Control		Simple focus, Manual
Lens Type		P iris(IR corrected)

Pan / Tilt / Rotate

Pan / Tilt / Rotate Range	Pan	0°~350°
	Tilt	0°~85°
	Rotate	0°~340°
	Others	Remote adjustment(Max. 200cycles)

Operational

Day & Night	Auto(ICR)
Backlight Compensation	BLC, HLC, WDR, SSDR

Design and specifications are subject to change without notice. The latest product information / specification can be found at HanwhaVision.com
Hanwha Vision is formerly known as Hanwha Techwin.

© Hanwha Vision CO., LTD. All rights reserved.

Operational

Wide Dynamic Range (dB)		120
Digital Noise Reduction		WiseNR II (Based on AI engine), SSNR V
Digital Image Stabilization		Support
Defog		Support
Motion Detection	Quantity	8ea
	Shape	8point Polygonal zones
Privacy Masking	Quantity	32ea
	Shape	4point Quadrangle zones
	Color / Option	Gray, Green, Red, Blue, Black, White, Mosaic
Gain Control		Off, Max gain, Manual
White Balance		ATW, NarrowATW, AWC, Manual, Indoor, Outdoor
LDC		Support(Fill/stretch mode)
Electronic Shutter	Mode	Minimum, Maximum, Anti flicker, Prefer shutter control(Based on AI engine)
	Speed Range	2~1/12,000sec
Video Rotation		Flip, Mirror, Hallway view(90°/270°)
Alarm Interface	Others	Support alarm I/O via optional I/O box
Alarm Triggers		Analytics, Network disconnect, Alarm input, App event, Time schedule, MQTT subscription
Alarm Events When Alarm Trigger Occurred		File upload(image): e-mail/FTP/SFTP, File upload(video clip): FTP/SFTP, Notification: e-mail, Recording: SD/SDHC/SDXC or NAS recording at event triggers,Alarm output, Handover: PTZ preset,send message by HTTP/HTTPS/TCP, MQTT: publication
Audio In		Support via optional I/O box
Audio Out		Support via optional I/O box
Light Type		IR LED
Light Viewable Length	IR	15m(49.21ft), 30m(98.43ft) wall installation scenario
IR Wavelength		850nm

Analytics

Classified Object Type		Person, Face, Vehicle, License plate
Attributes	Vehicle	Type(car, bus, truck, motorcycle, bicycle)
Thumbnail		DetectionShot
Analytics Events	Based on AI Engine	Object detection, Virtual line(Crossing/Direction), Virtual area(Loitering/Intrusion/Enter/Exit), Motion detection
	Normal	Defocus detection, Tampering, Fog detection, Audio detection, Sound classification, Shock detection, Virtual area(Appear/Disappear)
Business Intelligence	Based on AI Engine	People counting, Vehicle counting

© Hanwha Vision CO., LTD. All rights reserved.

Network

Ethernet		Metal shielded RJ-45(10/100/1000BASE-T)
Video Compression		H.265: Main, H.264: Main/Baseline/High,MJPEG
Smart Codec		Manual, WiseStreamIII
Bitrate Control		H.265/H.264: CBR or VBR, MJPEG: VBR
Streaming	Unicast	Up to 20 users
	Multicast	Support
	Multiple Streaming	Up to 10 profiles
Protocol		IPv4, IPv6, TCP/IP, UDP/IP, RTP(UDP), RTP(TCP), RTCP, RTSP, NTP, HTTP, HTTPS, SSL/TLS, DHCP, FTP, SFTP, SMTP, ICMP, IGMPv2, SNMPv1/v2c/v3(MIB-2), ARP, DNS, DDNS, QoS, UPnP, Bonjour, LLDP, CDP, SRTP(TCP, UDP Unicast), MQTT
Application Programming Interface	ONVIF	S, G, T, M
	Others	SUNAPI(HTTP API), Hanwha Vision Open Platform
Direct Cloud Connection		Support

Security

OS / Firmware Protect	Encrypted firmware, Secure boot, Signed firmware
User authentication	Digest authentication, Prevent brute-force attack
Network authentication	IEEE 802.1X(EAP-TLS, EAP-LEAP, EAP-PEAP, MSCHAPv2)
Secure Communication	HTTPS, WSS(WebSocket Secure), SRTP
Access Control	IP-based access control
Data Protect	Encryption credentials, Encrypt compress for live recording file export
Audit	Access / System / Event Log management
Device ID	Device certificate(Hanwha Vision Root CA)
Secure Storage	TPM(Trusted platform module), HTPM(Hanwha Trusted Platform Module), SDcard partition encrypt(AES-256)
Security Certificate	TPM 2.0 with FIPS 140-2 level2

General

Memory	RAM	4GB
	Flash	512MB
Edge Storage	Micro SD/SDHC/SDXC	Max. 512GB x 2slot(Total 1TB)
Edge Storage(OnCloud)	Micro SD/SDHC/SDXC	Max. 1TB x 2slots (Total 2TB) *Hanwha Vision branded microSD cards have been certified and recommended for OnCloud edge recording.

Environmental & Electrical

Operating Condition	Temperature	-50°C~+55°C(-58°F~+131°F)
	Humidity	0~100% RH(condensing)
	Others	Start up should be done at above -30°C, Humidity control with AIR vent

Design and specifications are subject to change without notice. The latest product information / specification can be found at HanwhaVision.com
Hanwha Vision is formerly known as Hanwha Techwin.

© Hanwha Vision CO., LTD. All rights reserved.

Environmental & Electrical

Storage Condition	Temperature	-50°C~+60°C(-58°F~+140°F)
	Humidity	0~90% RH(non-condensing)
Input Voltage		PoE+(IEEE802.3at, Class4)
Power Consumption	PoE	Max. 22.5W, typical 12.1W

Mechanical

Color	White
Material	Aluminum, Hard-coated dome
RAL Code	RAL9003
Product Dimensions	ø180x135mm(7.09x5.31")
Product Weight	2,000g(4.41lb)
Compatible Conduit Hole	19.1mm(3/4")(M25)
Compatible Gang Box	Single, Double, 4" Octagon, Square

Certifications & Standards

EMC	EN 50121-4, FCC 47 CFR 15 Subpart B Class A, ICES-3(A)/NMB-3(A), CE/UKCA - EN55032 Class A, EN 50130-4, EN 61000-3-2, EN 61000-3-3, VCCI CISPR 32 Class A, RCM AS-NZS CISPR 32 Class A, KS C 9832 Class A, KS C 9835
Safety	UL 62368-1, CAN/CSA C22.2 NO. 62368-1, IEC 62471
Environment	IEC/EN 63000, IEC 60529 IP66, IEC 60529 IP67, ISO 20653 IP6K9K, IEC 62262 IK10+, NEMA 250 type 4X

DORI (EN62676-4 standard)

Detect (25PPM/ 8PPF)	Wide	50.8m(166.77ft)
	Tele	176.6m(579.49ft)
Observe (63PPM/ 19PPF)	Wide	20.3m(66.71ft)
	Tele	70.7m(231.80ft)
Recognize (125PPM/ 38PPF)	Wide	10.2m(33.35ft)
	Tele	35.3m(115.90ft)
Identify (250PPM/ 76PPF)	Wide	5.1m(16.68ft)
	Tele	17.7m(57.95ft)

Design and specifications are subject to change without notice. The latest product information / specification can be found at HanwhaVision.com
Hanwha Vision is formerly known as Hanwha Techwin.

© Hanwha Vision CO., LTD. All rights reserved.

XNV-9083RZ

8MP AI IR Vandal Dome Camera



CAD

Unit: mm [inch]

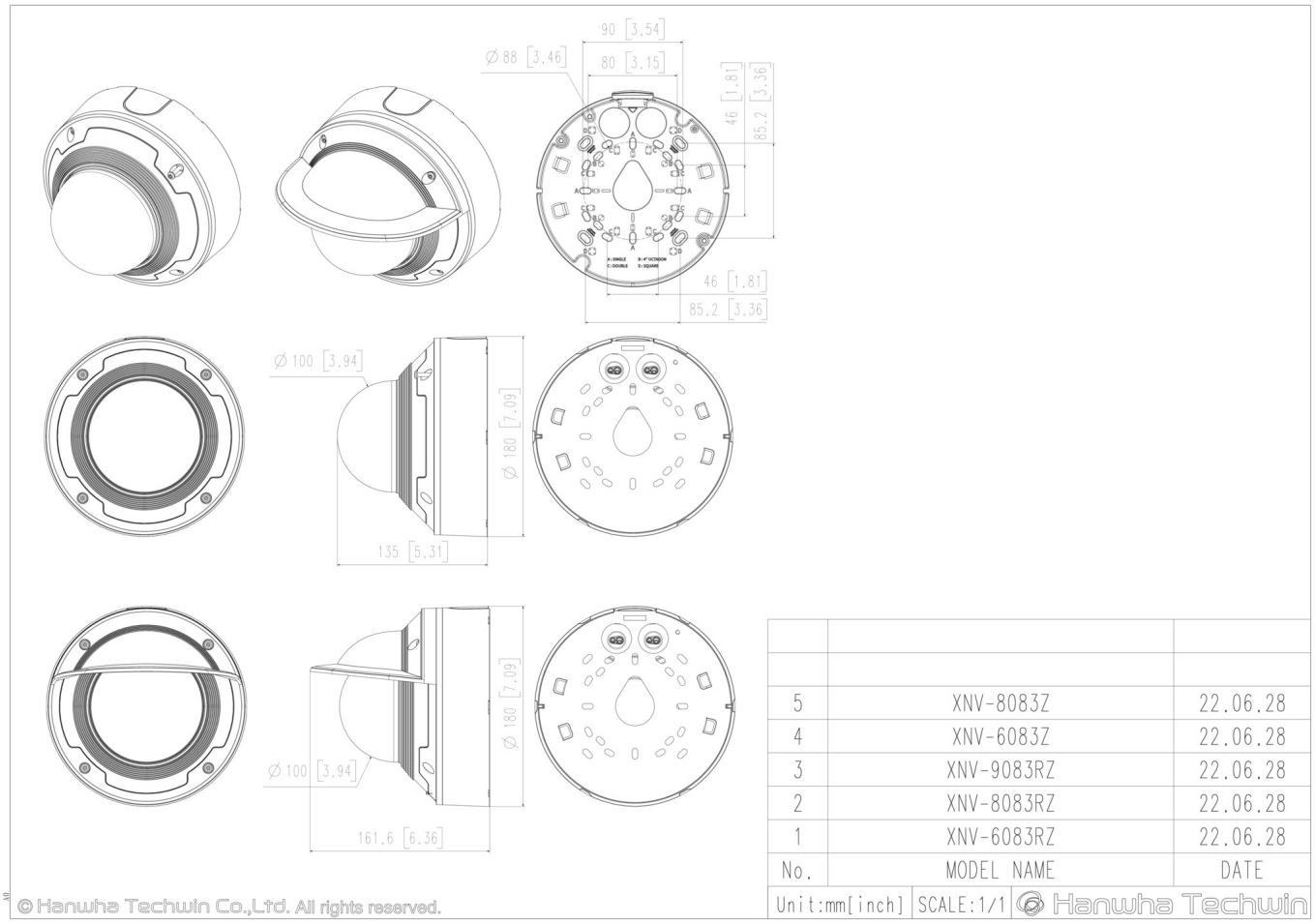

5	XNV-8083Z	22.06.28
4	XNV-6083Z	22.06.28
3	XNV-9083RZ	22.06.28
2	XNV-8083RZ	22.06.28
1	XNV-6083RZ	22.06.28
No.	MODEL NAME	DATE
Unit:mm[inch]	SCALE:1/1	Hanwha Techwin

Design and specifications are subject to change without notice. The latest product information / specification can be found at HanwhaVision.com
Hanwha Vision is formerly known as Hanwha Techwin.

© Hanwha Vision CO., LTD. All rights reserved.

Compatible Devices



SBP-180HMW1



SBV-180BW



SBV-180WW



SBP-150CMI



SBP-300CMI



SBP-300CMW1



SBP-900CMW

SBP-300CMTW



SBP-300CMTS



SBP-300WMW



SBP-300WMW1



SBP-390WMW2



SBD-180PMW



SBP-300PMW2



SHD-1370FPW



SBP-300LMW



SBP-156LMW1



SBP-300KMW1



SBP-300NBW



SPB-VAN89W



SPM-4210

Design and specifications are subject to change without notice. The latest product information / specification can be found at HanwhaVision.com
Hanwha Vision is formerly known as Hanwha Techwin.

© Hanwha Vision CO., LTD. All rights reserved.