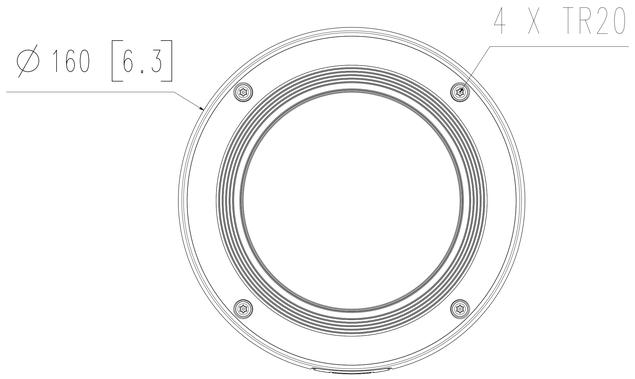

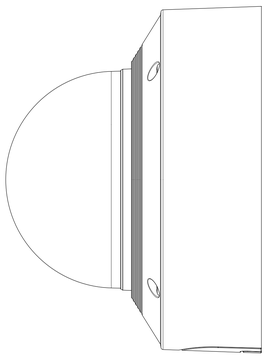

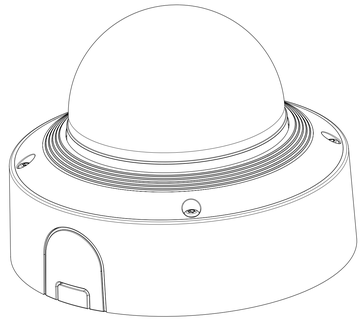

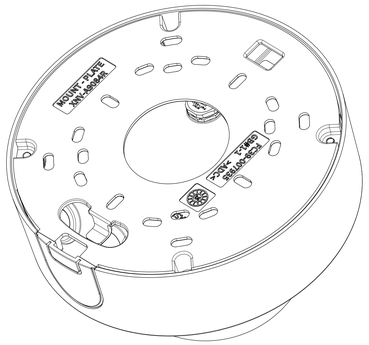

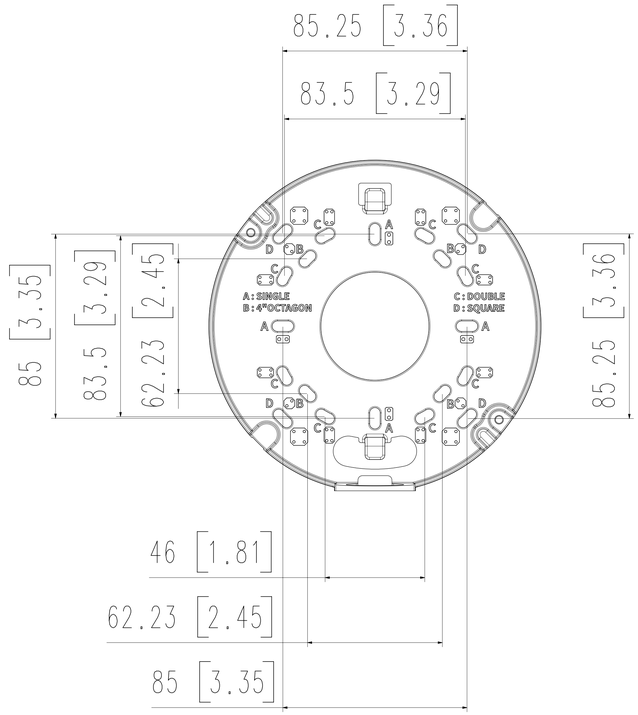

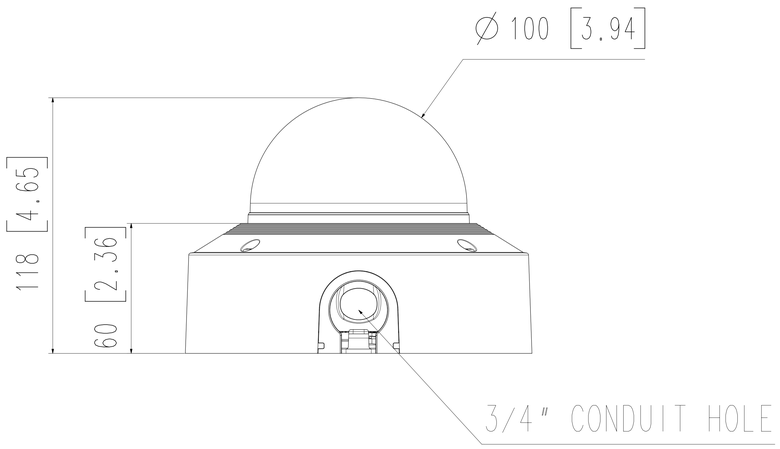

3		
2	XNV-A6084R/A8084R/A9084R	'25.09.10
1	XND-A6084RV/A8084RV/A9084RV	'25.09.10
No.	MODEL NAME	DATE

Unit:mm[inch]	SCALE:1/1	Hanwha Vision

© Hanwha Vision Co.,Ltd. All rights reserved.

A0