

Network Dome

XNV-C7083R

4MP AI IR Vandal Dome Camera

Key Features

- 4MP resolution
- 2.8~10mm (3.6x) motorized varifocal
- Color: 0.038 Lux (F1.4, 1/30sec, 30IRE), 0 Lux (IR LED on)
- Maximum 60 fps (H.265/H.264)
- WiseIR: IR viewable length 40 m (131.23 ft)
- Day & Night (ICR), extremeWDR (120 dB)
- Hard-coated dome bubble
- WiseNR II (Based on AI engine), WiseStreamIII (Based on AI engine)
- Analytics events based on AI engine (NPU) : Object detection (Person/Face/Vehicle - car, truck, bus, bicycle, motorcycle/License plate),
IVA (Virtual line/Area, Enter/Exit, Loitering, Direction, Intrusion)
- Analytics events : Defocus detection, Motion detection, Tampering, Fog detection
Audio detection, Sound classification, Shock detection, Appear/Disappear
- IP66, IP67, NEMA4X, IK10

Design and specifications are subject to change without notice. The latest product information / specification can be found at HanwhaVision.com
Hanwha Vision is formerly known as Hanwha Techwin.

© Hanwha Vision CO., LTD. All rights reserved.

XNV-C7083R

4MP AI IR Vandal Dome Camera



Specifications

Video

Imaging Device	Size	1/2.8"
	Type	CMOS
Resolution		2592x1520, 2560x1440, 1920x1080, 1280x1024, 1280x960, 1280x720, 1024x768, 800x600, 800x448, 720x576, 720x480, 640x480, 640x360, 320x240
Max. Framerate	H.265/H.264	60fps/50fps(60Hz/50Hz)(WDR off) / 30fps/25fps(60Hz/50Hz)(WDR on)
	MJPEG	30fps(@4MP Max. 5fps)
Min. Illumination (Lux)	Color(1/30sec, 30IRE)	0.038
	BW(1/30sec, 30IRE)	0.0038
Video Out		USB: Micro USB Type B. Preview and installation ONLY. Requires WiFi dongle.

Lens

Focal Length (mm)		2.8~10
Zoom Ratio	Optical	3.6x
Max Aperture Ratio (F number)	Wide	1.4
	Tele	3.0
Angular Field of View	Horizontal	110°~30°
	Vertical	61°~17°
	Diagonal	132°~35°
Min. Object Distance		0.5m(1.64ft)
Focus Control		Simple focus, Manual
Lens Type		Adaptive P iris(IR corrected)

Pan / Tilt / Rotate

Pan / Tilt / Rotate Range	Pan	0°~360°
	Tilt	0°~75°
	Rotate	0°~355°

Operational

Day & Night	Auto(ICR)
Backlight Compensation	BLC, HLC, WDR, SSDR

Design and specifications are subject to change without notice. The latest product information / specification can be found at HanwhaVision.com
Hanwha Vision is formerly known as Hanwha Techwin.

© Hanwha Vision CO., LTD. All rights reserved.

Operational

Wide Dynamic Range (dB)		120
Digital Noise Reduction		WiseNR II (Based on AI engine), SSNR V
Digital Image Stabilization		Support(built-in gyro sensor)
Defog		Support
Motion Detection	Quantity	8ea
	Shape	8point Polygonal zones
Privacy Masking	Quantity	32ea
	Shape	4point Quadrangle zones
	Color / Option	Gray, Green, Red, Blue, Black, White, Mosaic
Gain Control		Off, Max gain, Manual
White Balance		ATW, NarrowATW, AWC, Manual, Indoor, Outdoor
LDC		Support(Fill/stretch mode)
Electronic Shutter	Mode	Minimum, Maximum, Anti flicker, Prefer shutter control(Based on AI engine)
	Speed Range	2~1/12,000sec
Video Rotation		Flip, Mirror, Hallway view(90°/270°)
Alarm Interface	In/Out	2 configurable I/O ports
Alarm Triggers		Analytics, Network disconnect, Alarm input, App event, Time schedule, MQTT subscription
Alarm Events When Alarm Trigger Occurred		File upload(image): e-mail/FTP/SFTP, File upload(video clip): FTP/SFTP, Notification: e-mail, Recording: SD/SDHC/SDXC or NAS recording at event triggers,Alarm output, Handover: PTZ preset,send message by HTTP/HTTPS/TCP,Audio clip playback, MQTT: publication
Audio In		Selectable(mic in/line in)
Audio Out		Line out
Light Type		IR LED
Light Viewable Length	IR	WiseIR 40m(131.23ft)
IR Wavelength		850nm

Analytics

Classified Object Type		Person, Face, Vehicle, License plate
Attributes	Vehicle	Type(car, bus, truck, motorcycle, bicycle)
Thumbnail		DetectionShot
Analytics Events	Based on AI Engine	Object detection, Virtual line(Crossing/Direction), Virtual area(Loitering/Intrusion/Enter/Exit), Motion detection
	Normal	Defocus detection, Tampering, Fog detection, Audio detection, Sound classification, Shock detection, Virtual area(Appear/Disappear)
Business Intelligence	Based on AI Engine	People counting, Queue management, Heatmap, Vehicle counting

Design and specifications are subject to change without notice. The latest product information / specification can be found at HanwhaVision.com
Hanwha Vision is formerly known as Hanwha Techwin.

© Hanwha Vision CO., LTD. All rights reserved.

Network

Ethernet		Metal shielded RJ-45(10/100BASE-T)
Video Compression		H.265: Main, H.264: Main/Baseline/High,MJPEG
Audio Compression		G.711 u-law /G.726 selectable,G.726(ADPCM) 8kHz,G.711 8kHz, G.726: 16kbps,24kbps,32kbps,40kbps, AAC-LC: 48kbps at 16kHz
Smart Codec		Manual, WiseStreamIII
Bitrate Control		H.265/H.264: CBR or VBR, MJPEG: VBR
Streaming	Unicast	Up to 20 users
	Multicast	Support
	Multiple Streaming	Up to 10 profiles
Protocol		IPv4, IPv6, TCP/IP, UDP/IP, RTP(UDP), RTP(TCP), RTCP, RTSP, NTP, HTTP, HTTPS, SSL/TLS, DHCP, FTP, SFTP, SMTP, ICMP, IGMPv2, SNMPv1/v2c/v3(MIB-2), ARP, DNS, DDNS, QoS, UPnP, Bonjour, LLDP, CDP, SRTP(TCP, UDP Unicast), MQTT
Application Programming Interface	ONVIF	S, G, T, M
	Others	SUNAPI(HTTP API), Hanwha Vision Open Platform
Direct Cloud Connection		Support

Security

OS / Firmware Protect	Encrypted firmware, Secure boot, Signed firmware
User authentication	Digest authentication, Prevent brute-force attack
Network authentication	IEEE 802.1X(EAP-TLS, EAP-LEAP, EAP-PEAP, MSCHAPv2)
Secure Communication	HTTPS, WSS(WebSocket Secure), SRTP
Access Control	IP-based access control
Data Protect	Encryption credentials, Encrypt compress for live recording file export
Audit	Access / System / Event Log management
Device ID	Device certificate(Hanwha Vision Root CA)
Secure Storage	HTPM(Hanwha Trusted Platform Module), SDcard partition encrypt(AES-256)
Security Certificate	CyberSecurity assuarance program UL CAP(UL 2900-2-3 L2)

General

Memory	RAM	2GB
	Flash	512MB
Edge Storage	Micro SD/SDHC/SDXC	Max. 512GB x 1slot
Edge Storage(OnCloud)	Micro SD/SDHC/SDXC	Max. 1TB x 1slot *Hanwha Vision branded microSD cards have been certified and recommended for OnCloud edge recording.

Design and specifications are subject to change without notice. The latest product information / specification can be found at HanwhaVision.com
Hanwha Vision is formerly known as Hanwha Techwin.

© Hanwha Vision CO., LTD. All rights reserved.

Environmental & Electrical

Operating Condition	Temperature	-40°C~+55°C(-40°F~+131°F)
	Humidity	0~100% RH(condensing)
	Others	Start up should be done at above -20°C, Humidity control with AIR vent
Storage Condition	Temperature	-50°C~+60°C(-58°F~+140°F)
	Humidity	0~90% RH(non-condensing)
EPA(Effective Projected Area)		0.02㎡
Input Voltage		PoE(IEEE802.3af, Class3), 12VDC
Power Consumption	PoE	Max 12.95W, typical 10.8W
	12VDC	Max 12.5W, typical 10W

Mechanical

Color	White
Material	Aluminum, Hard-coated dome
RAL Code	RAL9003
Product Dimensions	ø160x118mm(6.30x4.65")
Product Weight	1,450g(3.20lb)
Compatible Conduit Hole	12.7mm(1/2")(M20)
Compatible Gang Box	Single, Double, 4" Octagon, Square

Certifications & Standards

EMC	FCC 47 CFR 15 Subpart B Class A, ICES-3(A)/NMB-3(A), CE/UKCA - EN55032 Class A, EN 50130-4, EN 61000-3-2, EN 61000-3-3, VCCI CISPR 32 Class A, RCM AS-NZS CISPR 32 Class A, KS C 9832 Class A, KS C 9835
Safety	UL 62368-1, CAN/CSA C22.2 NO. 62368-1, IEC 62471
Environment	IEC/EN 63000, IEC 60529 IP66, IEC 60529 IP67, IEC 62262 IK10, NEMA 250 type 4X

DORI (EN62676-4 standard)

Detect (25PPM/ 8PPF)	Wide	36.3m(119.09ft)
	Tele	193.5m(634.74ft)
Observe (63PPM/ 19PPF)	Wide	14.5m(47.64ft)
	Tele	77.4m(253.90ft)
Recognize (125PPM/ 38PPF)	Wide	7.3m(23.82ft)
	Tele	38.7m(126.95ft)
Identify (250PPM/ 76PPF)	Wide	3.6m(11.91ft)
	Tele	19.3m(63.47ft)

Design and specifications are subject to change without notice. The latest product information / specification can be found at HanwhaVision.com
Hanwha Vision is formerly known as Hanwha Techwin.

© Hanwha Vision CO., LTD. All rights reserved.

XNV-C7083R

4MP AI IR Vandal Dome Camera



CAD

Unit: mm [inch]

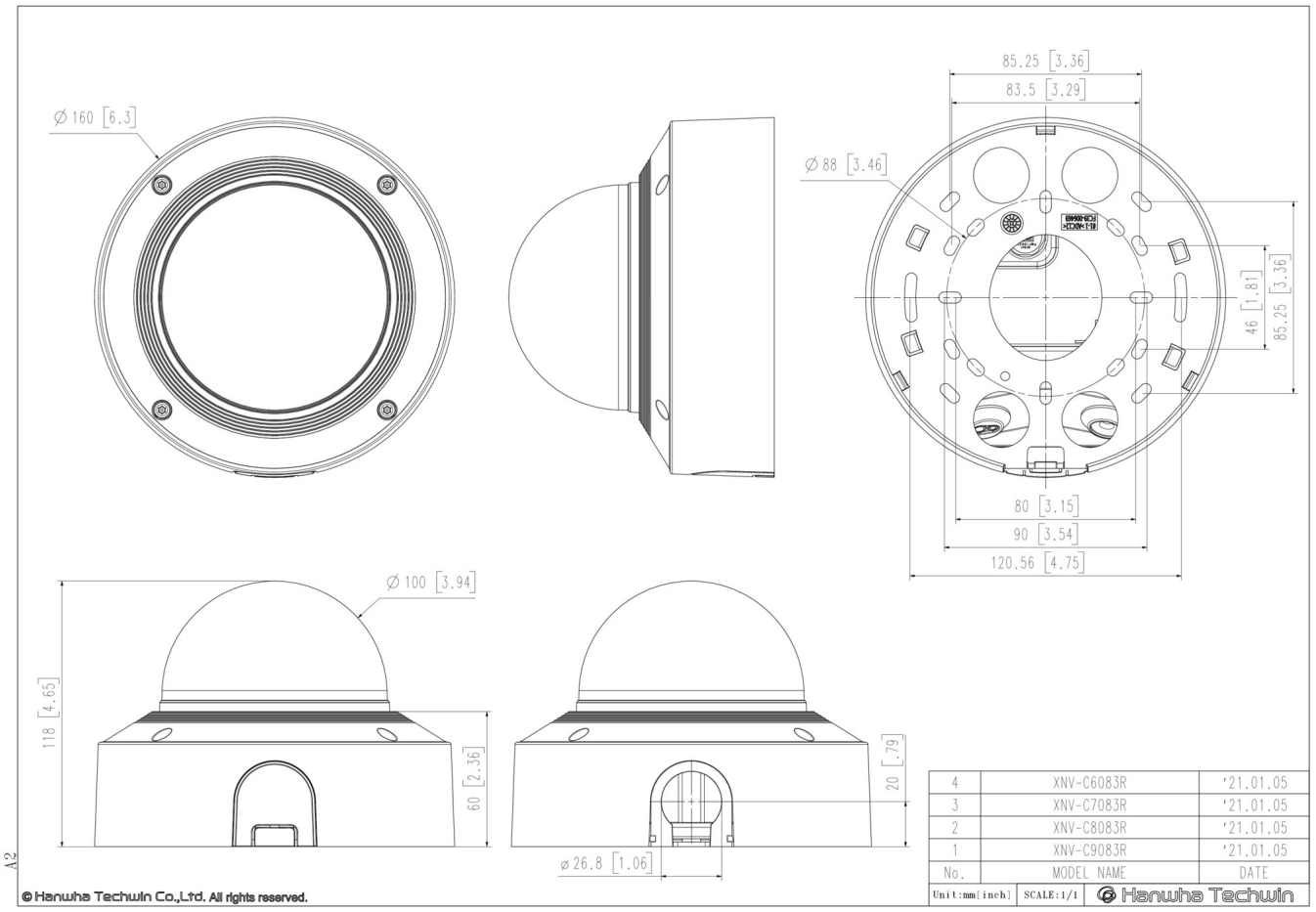

Design and specifications are subject to change without notice. The latest product information / specification can be found at HanwhaVision.com
Hanwha Vision is formerly known as Hanwha Techwin.

© Hanwha Vision CO., LTD. All rights reserved.

Compatible Devices


SBP-167HMW


SBP-160HMW1


SBV-161WCW


SBV-180BW


SBV-180WW


SBP-150CMI


SBP-300CMI


SBP-300CMW1


SBP-900CMW

SBP-300CMTW


SBP-300CMTS


SBP-300WMW


SBP-300WMW1


SBP-390WMW2


SBP-160WMW1


SBD-180PMW


SBP-300PMW2


SHD-1600FPW


SHD-1600FW


SBP-300LMW


SBP-156LMW1


SBP-300KMW1


SBP-300NBW


SPB-VAN88W

Design and specifications are subject to change without notice. The latest product information / specification can be found at HanwhaVision.com
Hanwha Vision is formerly known as Hanwha Techwin.

© Hanwha Vision CO., LTD. All rights reserved.