

Network Корпусные

XNZ-L6320A

2MP H.265 32x Zoom Camera

Key Features

- Maximum 2MP (1920 x 1080) resolution
- 4.44 ~ 142.6mm Optical 32x zoom, Digital 32x zoom
- Maximum 60fps@all resolutions (H.265 / H.264)
- H.265, H.264, MJPEG Codec, Multiple streaming
- Day & Night (ICR), WDR (120dB), Defog
- Video & Audio Analytics
- PoE, 12VDC, Micro SD/SDHC/SDXC 1slot 256GB

Design and specifications are subject to change without notice. The latest product information / specification can be found at HanwhaVision.com
Hanwha Vision is formerly known as Hanwha Techwin.

© Hanwha Vision CO., LTD. All rights reserved.

XNZ-L6320A

2MP H.265 32x Zoom Camera





Specifications

Video

Imaging Device	Size	1/2.8"
	Type	CMOS
Resolution		1920x1080, 1280x1024, 1280x960, 1280x720, 1024x768, 800x600, 800x448, 720x576, 720x480, 640x480, 640x360, 320x240
Max. Framerate	H.265/H.264	60fps/50fps(60Hz/50Hz)
	MJPEG	30fps
Min. Illumination (Lux)	Color(1/30sec, 30IRE)	0.05
	BW(1/30sec, 30IRE)	0.005
Video Out		CVBS: 1.0 Vp-p / 75Ω composite for installation

Lens

Focal Length (mm)		4.44~142.6
Zoom Ratio	Optical	32x
	Digital	32x
Max Aperture Ratio (F number)	Wide	1.6
	Tele	4.4
Angular Field of View	Horizontal	64.66°~2.29°
	Vertical	38.08°~1.30°
Min. Object Distance		1.5m(4.92ft)
Focus Control		Auto, Oneshot AF
Lens Type		DC auto iris

Operational

Direction Indicator	Support
Day & Night	Auto(ICR)
Backlight Compensation	BLC, HLC, WDR, SSDR
Wide Dynamic Range (dB)	120
Digital Noise Reduction	SSNR V
Digital Image Stabilization	Support
Defog	Support

Design and specifications are subject to change without notice. The latest product information / specification can be found at HanwhaVision.com
Hanwha Vision is formerly known as Hanwha Techwin.

© Hanwha Vision CO., LTD. All rights reserved.

Operational

Motion Detection	Quantity	8ea
	Shape	8point Polygonal zones
Privacy Masking	Quantity	32ea
	Shape	Rectangular zones
	Color / Option	Gray, Green, Red, Blue, Black, White, Mosaic
Gain Control		Low, Middle, High, Off
White Balance		ATW, AWC, Manual, Indoor, Outdoor, Mercury, Sodium
Electronic Shutter	Mode	Minimum, Maximum, Anti flicker
	Speed Range	2~1/12,000sec
Video Rotation		Flip, Mirror
Serial Interface		RS-485(Samsung-T, Pelco-D/P, Panasonic, Bosch, AD, GE, Vicon, Honeywell)
Alarm Interface	In/Out	Input 1ea, Output 1ea
Alarm Triggers		Analytics, Network disconnect, Alarm input
Alarm Events When Alarm Trigger Occurred		File upload(image): e-mail/FTP, Notification: e-mail, Recording: SD/SDHC/SDXC or NAS recording at event triggers,Alarm output, Handover: PTZ preset
Audio In		Selectable(mic in/line in)
Audio Out		Line out

Analytics

Analytics Events	Normal	Defocus detection, Motion detection, Tampering, Fog detection, Face detection, Audio detection, Sound classification, Virtual area(Lotering, Intrusion, Enter/Exit, Appear/Disappear)

Network

Ethernet		Metal shielded RJ-45(10/100BASE-T)
Video Compression		H.265: Main, H.264: Main/Baseline/High,MJPEG
Audio Compression		G.711 u-law /G.726 selectable,G.726(ADPCM) 8kHz,G.711 8kHz, G.726: 16kbps,24kbps,32kbps,40kbps, AAC-LC: 48kbps at 16kHz
Smart Codec		Manual, WiseStream II
Bitrate Control		H.265/H.264: CBR or VBR, MJPEG: VBR
Streaming	Unicast	Up to 20 users
	Multicast	Support
	Multiple Streaming	Up to 10 profiles
Protocol		IPv4, IPv6, TCP/IP, UDP/IP, RTP(UDP), RTP(TCP), RTCP, RTSP, NTP, HTTP, HTTPS, SSL/TLS, DHCP, FTP, SMTP, ICMP, IGMPv2, SNMPv1/v2c/v3(MIB-2), ARP, DNS, DDNS, QoS, UPnP, Bonjour, LLDP, SRTP(TCP, UDP Unicast), PIM-SM

Design and specifications are subject to change without notice. The latest product information / specification can be found at HanwhaVision.com
Hanwha Vision is formerly known as Hanwha Techwin.

© Hanwha Vision CO., LTD. All rights reserved.

Network

Application Programming Interface	ONVIF	S, G, T
	Others	SUNAPI(HTTP API), Hanwha Vision Open Platform
Direct Cloud Connection		Optional (needs gateway)

Security

OS / Firmware Protect	Encrypted firmware
User authentication	Digest authentication
Network authentication	IEEE 802.1X(EAP-TLS, EAP-LEAP, EAP-PEAP, MSCHAPv2)
Secure Communication	HTTPS, WSS(WebSocket Secure), SRTP
Access Control	IP-based access control
Data Protect	Encryption credentials
Audit	Access / System / Event Log management
Device ID	Device certificate(Hanwha Vision Root CA)

General

Memory	RAM	1GB
	Flash	256MB
Edge Storage	Micro SD/SDHC/SDXC	Max. 256GB x 1slot

Environmental & Electrical

Operating Condition	Temperature	-10°C~+55°C(+14°F~+131°F)
	Humidity	0~90% RH(non-condensing)
Storage Condition	Temperature	-50°C~+60°C(-58°F~+140°F)
	Humidity	0~90% RH(non-condensing)
Input Voltage		PoE(IEEE802.3af, Class3), 12VDC
Power Consumption	PoE	Max. 7.5W, typical 5.0W
	12VDC	Max. 5.7W, typical 3.7W

Mechanical

Color	Black
Material	Metal
RAL Code	RAL9005
Product Dimensions	72(W)x63.9(H)x135.4(D)mm(2.83x2.52x5.33")
Product Weight	480g(1.06lb)

DORI (EN62676-4 standard)

Detect (25PPM/ 8PPF)	Wide	60.7m(199.1ft)
	Tele	1921.3m(6303.4ft)

Design and specifications are subject to change without notice. The latest product information / specification can be found at HanwhaVision.com
Hanwha Vision is formerly known as Hanwha Techwin.

© Hanwha Vision CO., LTD. All rights reserved.

DORI (EN62676-4 standard)

Observe (63PPM/ 19PPF)	Wide	24.3m(79.6ft)
	Tele	768.5m(2521.4ft)
Recognize (125PPM/ 38PPF)	Wide	12.1m(39.8ft)
	Tele	384.3m(1260.7ft)
Identify (250PPM/ 76PPF)	Wide	6.1m(19.9ft)
	Tele	192.1m(630.3ft)

Design and specifications are subject to change without notice. The latest product information / specification can be found at HanwhaVision.com
Hanwha Vision is formerly known as Hanwha Techwin.

© Hanwha Vision CO., LTD. All rights reserved.

XNZ-L6320A

2MP H.265 32x Zoom Camera





CAD

Unit: mm [inch]

XNZ-L6320A 2MP 32x Zoom Camera

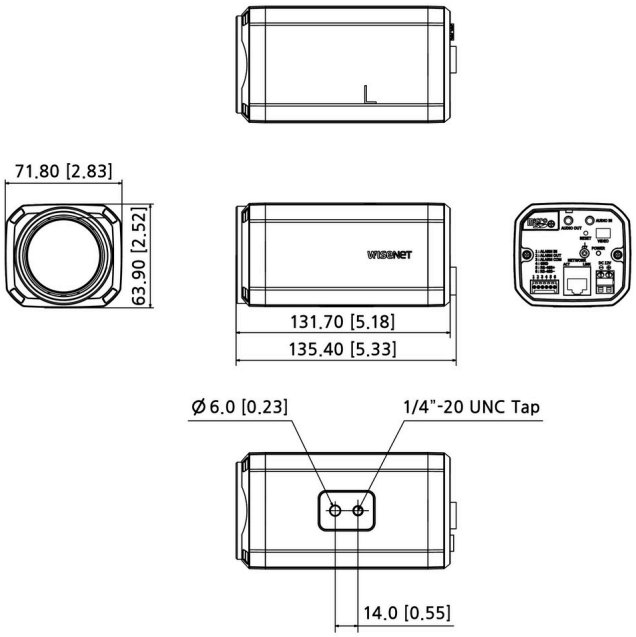

Reference image

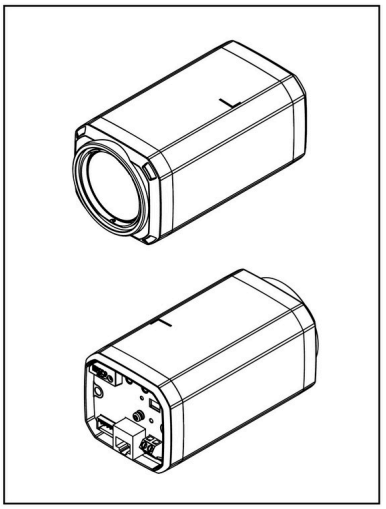

Revision	V1.1
Revision Date	24/09/13
Paper Size	A1
Unit	mm [inch]
Scale	1 : 1

©Hanwha Vision Co., Ltd. All right reserved.

Design and specifications are subject to change without notice. The latest product information / specification can be found at HanwhaVision.com
Hanwha Vision is formerly known as Hanwha Techwin.

© Hanwha Vision CO., LTD. All rights reserved.